Cat. No. V235-E1-04

NSA-Series CPU Box
NSA-Series Touch Panel

NSA-Series Box-type Industrial PC

USER´S MANUAL

OMRON

NSA-series Box-type Industrial PC

NSA-series CPU Box

NSA-CPU01/02/03/04-J

NSA-CPU01/02/03/04-E

NSA-series Touch Panel

NSA-TX151B/S

NSA-TY171B/S

USER'S MANUAL

Introduction

The NSA-series Box-type Industrial PCs are industrial, panel-mountable computers consisting of an NSA-series CPU Box (NSA-CPU□□) with a Celeron® M Processor and an NSA-series Touch Panel (NSA-TX□□□/TY□□□) with a touch panel input and a display output.
Be sure to read and understand the functions and performance specifications in this manual prior to using an NSA-series Box-type Industrial PC, and operate it as described in this manual.

Intended Audience

This manual is intended for the following personnel, who must also have knowledge of electrical systems (an electrical engineer or the equivalent) and computers.

· Personnel in charge of introducing FA systems into production facilities
· Personnel in charge of designing FA systems
· Personnel in charge of managing FA systems and facilities

Notice

This manual provides information for connecting and setting up an NSA-series Box-type Industrial PC. Be sure to read this manual before attempting to use the NSA-series Box-type Industrial PC, and keep the manual close at hand for reference during operation.

Read and Understand this Manual

Please read and understand this manual before using the product. Please consult your OMRON representative if you have any questions or comments.

Warranty and Limitations of Liability

WARRANTY
OMRON's exclusive warranty is that the products are free from defects in materials and workmanship for a period of one year (or other period if specified) from date of sale by OMRON. OMRON MAKES NO WARRANTY OR REPRESENTATION, EXPRESS OR IMPLIED, REGARDING NON-INFRINGEMENT, MERCHANTABILITY, OR FITNESS FOR PARTICULAR PURPOSE OF THE PRODUCTS. ANY BUYER OR USER ACKNOWLEDGES THAT THE BUYER OR USER ALONE HAS DETERMINED THAT THE PRODUCTS WILL SUITABLY MEET THE REQUIREMENTS OF THEIR INTENDED USE. OMRON DISCLAIMS ALL OTHER WARRANTIES, EXPRESS OR IMPLIED.

LIMITATIONS OF LIABILITY
OMRON SHALL NOT BE RESPONSIBLE FOR SPECIAL, INDIRECT, OR CONSEQUENTIAL DAMAGES, LOSS OF PROFITS OR COMMERCIAL LOSS IN ANY WAY CONNECTED WITH THE PRODUCTS, WHETHER SUCH CLAIM IS BASED ON CONTRACT, WARRANTY, NEGLIGENCE, OR STRICT LIABILITY. In no event shall the responsibility of OMRON for any act exceed the individual price of the product on which liability is asserted. IN NO EVENT SHALL OMRON BE RESPONSIBLE FOR WARRANTY, REPAIR, OR OTHER CLAIMS REGARDING THE PRODUCTS UNLESS OMRON'S ANALYSIS CONFIRMS THAT THE PRODUCTS WERE PROPERLY HANDLED, STORED, INSTALLED, AND MAINTAINED AND NOT SUBJECT TO CONTAMINATION, ABUSE, MISUSE, OR INAPPROPRIATE MODIFICATION OR REPAIR.

Application Considerations

SUITABILITY FOR USE

OMRON shall not be responsible for conformity with any standards, codes, or regulations that apply to the combination of products in the customer's application or use of the products.

At the customer's request, OMRON will provide applicable third party certification documents identifying ratings and limitations of use that apply to the products. This information by itself is not sufficient for a complete determination of the suitability of the products in combination with the end product, machine, system, or other application or use.

The following are some examples of applications for which particular attention must be given. This is not intended to be an exhaustive list of all possible uses of the products, nor is it intended to imply that the uses listed may be suitable for the products:

- Outdoor use, uses involving potential chemical contamination or electrical interference, or conditions or uses not described in this manual.
- Nuclear energy control systems, combustion systems, railroad systems, aviation systems, medical equipment, amusement machines, vehicles, safety equipment, and installations subject to separate industry or government regulations.
- Systems, machines, and equipment that could present a risk to life or property.

Please know and observe all prohibitions of use applicable to the products.

NEVER USE THE PRODUCTS FOR AN APPLICATION INVOLVING SERIOUS RISK TO LIFE OR PROPERTY WITHOUT ENSURING THAT THE SYSTEM AS A WHOLE HAS BEEN DESIGNED TO ADDRESS THE RISKS, AND THAT THE OMRON PRODUCTS ARE PROPERLY RATED AND INSTALLED FOR THE INTENDED USE WITHIN THE OVERALL EQUIPMENT OR SYSTEM.

PROGRAMMABLE PRODUCTS

OMRON shall not be responsible for the user's programming of a programmable product, or any consequence thereof.

Disclaimers

CHANGE IN SPECIFICATIONS

Product specifications and accessories may be changed at any time based on improvements and other reasons.

It is our practice to change model numbers when published ratings or features are changed, or when significant construction changes are made. However, some specifications of the products may be changed without any notice. When in doubt, special model numbers may be assigned to fix or establish key specifications for your application on your request. Please consult with your OMRON representative at any time to confirm actual specifications of purchased products.

DIMENSIONS AND WEIGHTS

Dimensions and weights are nominal and are not to be used for manufacturing purposes, even when tolerances are shown.

PERFORMANCE DATA

Performance data given in this manual is provided as a guide for the user in determining suitability and does not constitute a warranty. It may represent the result of OMRON's test conditions, and the users must correlate it to actual application requirements. Actual performance is subject to the OMRON Warranty and Limitations of Liability.

ERRORS AND OMISSIONS

The information in this manual has been carefully checked and is believed to be accurate; however, no responsibility is assumed for clerical, typographical, or proofreading errors, or omissions.

Safety Precautions

Safety-related Indications and Their Meanings

The following precautionary indications and symbols are used in this manual to aid in the safe usage of the NSA-series Box-type Industrial PCs. These precautions contain important safety information. Be sure to observe them carefully.
The indications and symbols used herein, and their meanings, are as listed below.

⚠ **WARNING**	Indicates a potentially hazardous situation which, if not avoided, could result in death or serious injury. Additionally, there may be severe property damage.

⚠ **Caution**	Indicates a potentially hazardous situation which, if not avoided, may result in minor or moderate injury, or property damage.

Precautions for Safe Use

Indicates actions that should be done, or avoided, for the safe use of this product.

Precautions for Correct Use

Indicates actions that should be done, or avoided, to prevent operating failure or malfunction of this product, or to prevent adverse effects on the performance or functions of this product.

Note

Notes within the text of this manual indicate safety-related points and information that are equivalent in importance to those included in the *Precautions for Safe Use* sections.

⚠ **WARNING** Failure to read and understand the information provided in this manual may result in personal injury or death, damage to the product, or product failure. Please read each section in its entirety and be sure you understand the information provided in the section and related sections before attempting any of the procedures or operations given.

Symbols

	**Electrical Shock Caution** Indicates possibility of electric shock under specific conditions.
	**General Prohibition** Indicates non-specific general prohibitions.
	**Disassembly Prohibition** Indicates prohibitions when there is a possibility of injury, such as from electric shock, as the result of disassembly.
	**Mandatory Action** Indicates a mandatory action with the specific contents indicated in the circle and described in the text.
	**General Caution** Indicates non-specific general cautions, warnings, and dangers.

⚠WARNING

	Be sure to observe all warning instructions while using this product.
	Do not scratch the power supply connection cable. Do not scratch or forcefully bend the power supply connection cable. Doing so may damage the cable and may cause electric shock or fire.
	Do not disassemble or modify the product. Do not disassemble, cut, modify, or burn the product, and do not touch internal parts while the power is ON. Doing so may cause electric shock or fire.
	Do not splash with water. • Do not use the product in a location where it might be splashed with water, or in any location near water. Water contacting electrical components may cause electric shock, ground fault, or short-circuiting, which may result in fire. • If a beverage or other liquid is spilled onto the product, turn OFF the power immediately, and remove all connectors from the power supply input terminal block.
	Do not touch the power supply input terminals with wet hands. Doing so may cause electric shock or other injury.
	If smoke or an abnormal odor or sound is generated, turn OFF the power immediately, and disconnect the power supply input connector. Using the product in this condition may cause short-circuiting, which may result in fire or electric shock.
	If the product is knocked over or is subject to a strong impact, turn OFF the power immediately, and disconnect the power supply input connector. Using the product in this condition may cause short-circuiting, which may result in fire or electric shock.
	Ground the product. A functional terminal is provided for grounding. If the product is not grounded and a ground fault occurs, it may result in fire or electric shock.

⚠Caution

	Hold the connector housing when disconnecting the power connection cable. Hold the connector housing, rather than the cable, when disconnecting the cable. Pulling the cable may break wires inside, which may result in heating or fire.
	Observe all relevant standards and environmental conditions. Observe all standards for power supply voltage, frequency, capacity, etc. Using the product under conditions not prescribed by these standards may cause electric shock or fire.
	Do not place objects on top of the product. Do not place objects on top of the product or press on the product. Doing so may damage the product and result in injury.
	Do not place objects near the ventilation holes. Do not place objects near the ventilation holes, or block the holes in any way. Doing so may cause the product to malfunction.
	Do not tip the product over or strike it with anything. Do not subject the product to vibration or impacts, particularly when the power is ON. If the product is subjected to impacts by being dropped or struck, it may fail to operate correctly.
	Do not use or store the product in the following locations. Using or storing the product in any of the following locations may cause electric shock, fire, or malfunction. • Locations that are unstable or subject to vibration • Locations subject to static electricity • Locations subject to dust or high humidity • Locations subject to direct sunlight • Locations subject to flames or heat accumulation • Locations subject to exposure to chemicals • Locations close to heating or cooling equipment • Locations subject to water seepage • Locations subject to ground faults Do not use the product near a radio, television, or cordless telephone. Doing so may cause electrical noise to enter the product or the radio, television, or cordless telephone, preventing correct operation.
	Do not allow condensation to form on or in the product. Installing the product in a location with high humidity, or installing the product indoors soon after bringing it in from the outdoor cold may cause condensation to form on or in the product, and using the product in this condition may cause malfunction.
	Dispose of the product and batteries correctly. The product contains lithium batteries. Dispose of the product and batteries according to local ordinances as they apply. Have qualified specialists properly dispose of used batteries as industrial waste.
	Provide sufficient working space. Prior to moving the product or replacing components, ensure that there is sufficient room and no interfering obstacles.

	Turn OFF the power supply before doing any work on the product. Do not touch the product case or the heat dissipation panel on the rear surface of the case while the power supply is turned ON because they become very hot. Also, turn OFF the power and wait for the product to cool down before doing any maintenance work on the product. When turning OFF the power supply, either turn OFF the external input power supply or disconnect the power supply input connector.
	The NSA-series CPU Box (NSA-CPU□□) and NSA-series Touch Panel (NSA-TX□□□/TY□□□) must be installed within a control panel. Use a control panel that meets or exceeds Type 1 enclosure standards.
	Maintain appropriate environmental conditions. Use the NSA-series CPU Box (NSA-CPU□□) and NSA-series Touch Panel (NSA-TX□□□/TY□□□) in an environment with a pollution degree of 2 or better.
	Do not connect the NSA-series Box-type Industrial PC directly to a commercial power supply. Supply power through an isolation transformer with a capacity of 200 VA max.

Precautions for Safe Use

Observe the following precautions when using the NSA-series Box-type Industrial PC.

1. When unpacking the product, check carefully for any external scratches or other damage. Also, shake the product gently and check for any abnormal sound.
2. The mounting panel for the NSA-series Touch Panel (NSA-TX□□□/TY□□□) must be between 1.6 and 4.0 mm thick.
3. Evenly tighten the mounting brackets for the NSA-series Touch Panel (NSA-TX□□□/TY□□□) to a torque of between 0.5 and 0.6 N·m to maintain water and dust resistance. If the mounting brackets are not tightened to the specified torque, or if they are tightened unevenly, the front sheet may become warped. In addition, make sure that the panel is not dirty or warped and that it is strong enough to hold the Modules.
4. Make sure that the panel in which the NSA-series CPU Box (NSA-CPU□□) is mounted is strong enough to hold the NSA-series CPU Box.
5. Do not let metal particles enter the Modules when preparing the panel.
6. Do not connect an AC power supply to the power terminals.
7. Do not perform a dielectric voltage test.
8. Use a DC power supply with reinforced insulation and minimal voltage fluctuation.
   Rated power supply voltage: 24 VDC (Allowable range: 20.4 to 27.6 VDC),
   Capacity: Check the power consumption for the devices to be used.
9. Connect to the power supply terminal block using a twisted-pair cable with stranded copper wire between AWG16 and AWG12 with a rated temperature of 75°C.
   Tighten the terminal screws to a torque of 0.5 to 0.6 N·m (5 to 7 lb·in). Be sure the screws are properly tightened.
10. Turn OFF the power supply before connecting or disconnecting cables.
11. Always tighten the connector screws after connecting communications cables.
12. The maximum tensile load for cables is 30 N. Do not apply loads greater than this.
13. Confirm the safety of the system before turning ON or OFF the power supply.
14. Always reset the power supply after changing switch settings.
15. Do not perform the following operations while the Memory Card is being accessed:
    - Turning OFF the power supply to the NSA-series CPU Box (NSA-CPU□□).
    - Removing the Memory Card
      Always follow the specified procedure when removing the Memory Card.
16. Do not press the touch switch with a force greater than 30 N.
17. Do not accidentally press touch switch when the backlight is not lit or when the

display does not appear. Confirm the safety of the system before pressing touch panels.

18. Do not attempt to disassemble, repair, or modify the product in any way.
19. Dispose of any battery that has been dropped on the floor or otherwise subjected to excessive shock, as this may cause the battery fluid to leak.
20. Dispose of the product and batteries according to local ordinances as they apply. Have qualified specialists properly dispose of used batteries as industrial waste.

21. Do not connect a USB connector to any device that is not applicable.
22. Before connecting a USB connector to a device, make sure that the device is free of damage.
23. When mounting the Battery, be sure to use the correct Battery and mount it correctly.
24. The backlight in the NSA-series Box-type Industrial PC contains mercury. Do not dispose of the NSA-series Box-type Industrial PC together with other waste to be sent to a disposal site. Dispose of the NSA-series Box-type Industrial PC according to local ordinances as they apply.
25. Use a PCI Board that complies with the EMC Directive. If a PCI Board that does not comply with the EMC Directive is used, there are certain measures that the user must take.
26. Use only a CF Card that has the CE Marking.
27. Thoroughly test any application programs created by users or third-party vendors to confirm that they operate properly before actually using them with the product.
28. OMRON cannot assume any responsibility for programs created by any party other than OMRON, nor for the results of using such programs.

Precautions for Correct Use

- Monitor Connection Precautions
  The NSA-series Box-type Industrial PC consists of a CPU Box (NSA-CPU□□) and a Touch Panel (NSA-TX□□□/TY□□□). Use an NSA-TX□□□ or NSA-TY□□□ as the monitor to connect to the CPU Box. Operation may be incorrect if any other monitor is connected.

Install the NSA-series Box-type Industrial PC correctly, as described in this manual.

- Do not install the Unit in the following places:
  - Locations subject to severe temperature changes
  - Locations subject to temperatures or humidity outside the range given in the specifications
  - Locations subject to condensation as the result of high humidity
  - Locations subject to splashing chemicals
  - Locations subject to splashing oil
  - Locations subject to corrosive or flammable gas
  - Locations subject to shock or vibration
  - Locations directly subject to wind or rain outdoors
  - Locations subject to strong ultraviolet light

- Take sufficient shielding measures when installing systems in the following locations:
  - Locations subject to severe static electricity or noise from other devices
  - Locations subject to strong electrical fields or magnetic fields
  - Locations close to power supply lines
  - Locations subject to possible exposure to radioactivity

- The entire system may stop if the power supply is turned ON or OFF incorrectly. Follow the specified procedures for turning the power supply ON and OFF.
- Never use volatile solvents, such as benzine or thinner, or chemical cloths for cleaning.
- The ambient device temperature is the temperature, including heat generated by the device itself, at a distance of 50 mm from the center of the case on the side with the radiator.
- If a PCI board is used, the internal temperature will increase by 11°C at slot 1 and by 16°C at slot 2 (with each value including the heat generated by the PCI board itself). Determine the ambient operating temperature for the device considering the ambient operating temperature of the PCI board to be mounted, with an upper limit of 50°C for the ambient operating temperature of the device.
- If an audio device is connected, audio noise may occur depending on the cable connection conditions or installation environment. Be sure to sufficiently check operation before use. Also, do not use a cable that exceeds 10 m.

- Device Service Life Precautions
  · As a general guide, the device service life is 37,000 hours (40°C).

■ Warnings and Precautions

- LCD Panel Precautions
  · There may be inconsistency in the brightness of the LCD panel depending on what is displayed and the contrast setting. This is not a malfunction
  · There may be small spots on the display. This is not a malfunction.
  · The display color may appear to change if the display is viewed outside the viewing angle. This is a basic characteristic of LCDs.
  · There may be an afterimage if the same image is displayed for an extended period of time.
- Windows XP Embedded
  · Windows XP Embedded is an OS designed for embedded use. Some application programs that operate on the Windows XP Professional OS may not operate on the Windows XP Embedded OS of an NSA-series Industrial PC.
  · Windows components cannot be added and deleted by using the menu command under *Add or Remove Programs* from the *Control Panel*.
  · The Windows Updates for Windows XP Professional cannot be installed.
  · The service packs for Windows XP Professional cannot be installed.

Revision History

A manual revision code appears as a suffix to the catalog number on the front cover of the manual.

Cat. No.	V235-E1-04

Revision Code

Revision code	Date	Revision content
01	June 2007	Original production
02	February 2008	• Added starting and exiting BIOS setup. • Added troubleshooting and accessories list. • Deleted the Timer Start function. • Corrected errors and added information including *Appendix. 6*.
03	May 2008	**Page 4-13:** Adding information on Shutdown OS and Reboot OS Buttons at bottom of page.
04	December 2008	Added appendix 7 on compliance with shipping standards.

Checking the Contents of the Package

The NSA-series Box-type Industrial PC is shipped together with a number of accessories. When opening the package, make sure that all of the parts shown below are included and in good condition.
In the event that any of these parts is missing or damaged, contact the sales representative from whom you purchased the product.

- NSA-series CPU Box
  NSA-CPU01/02/03/04-J
  NSA-CPU01/02/03/04-E

☐ NSA-series CPU Box

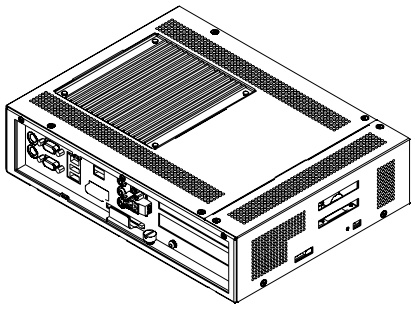

☐ Mounting Brackets (2)

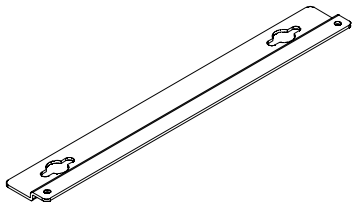

☐ M3 screws (4 screws, for securing the mounting brackets to the NSA-series CPU Box)
☐ M4 screws (4 screws, for securing the mounting brackets on the NSA-series CPU Box to the panel, or for securing the NSA-series Touch Panel to the NSA-series CPU Box)
☐ Binding band (1)
☐ Ferrite core (1, Mounted to the keyboard cable)
☐ Operating system license sheet
☐ Instruction Sheet
☐ DVD (for recovery)

- NSA-series Touch Panel
  NSA-TX151B/S
  NSA-TY171B/S

☐ NSA-series Touch Panel

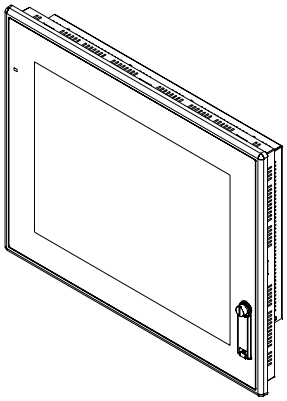

☐ Mounting Brackets (12)

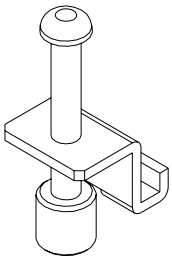

☐ Binding band (1)
☐ Instruction Sheet

Note: Use one of the following DVI and USB Cables to connect the NSA-series CPU Box and the NSA-series Touch Panel. These Cables are sold separately.

Model	Cable length		Remarks
	DVI	USB	
NSA-DU02	0.1 m	0.1 m	For stacked connection
NSA-DU22	2 m	2 m	---
NSA-DU52	5 m	5 m	---

Table of Contents

Appendix

Section 1

Overview and Specifications

1-1 Overview

1-1-1 Overview

An NSA-series Box-type Industrial PC is an industrial, panel-mountable computer featuring RAS (reliability, availability, and serviceability) functions and consisting of an NSA-series CPU Box (NSA-CPU□□) with a Celeron® M Processor and an NSA-series Touch Panel (NSA-TX□□□ or NSA-TY□□□) with a touch panel input and a display output.

1-1-2 Features

■ High-speed CPU and Chipset with Integrated Graphic Core

The NSA-series Box-type Industrial PC is equipped with a 1.3 GHz Celeron® M Processor that has a built-in 512-Kbyte L2 cache. It also features a chipset with an integrated graphic core that produces sharp images and vivid, realistic graphics. The NSA-series Box-type Industrial PC maintains optimal performance through distributed processing that makes efficient and balanced use of both the graphics and system memory.

■ High-performance Display

The XGA/SXGA color LCD featured in the NSA-series Box-type Industrial PC is a high-contrast, high-resolution TFT display.

■ Thin Profile

The NSA-series Box-type Industrial PC has a thin profile, with a thickness of only 57 mm for the NSA-series Touch Panel and only 76.5 mm for the NSA-series CPU Box (not including projections).

■ Flexibility

The modular structure consisting of an NSA-series CPU Box and NSA-series Touch Panel provides flexibility by allowing the Modules to be installed in combination or separately according to application requirements.

Note: The DVI and USB Cable required to connect the NSA-series CPU Box and NSA-series Touch Panel is sold separately.

■ Waterproof Construction

The front panel is provides waterproofing equivalent of IP65F.

■ Network Functions

Network connection is quick and easy because each NSA-series Box-type Industrial PC comes with a 10 Base-T/100 Base-TX Ethernet Connector as standard equipment.

■ DiskOnModule (DOM) Storage Drive

The vibration and shock resistance of the NSA-series Box-type Industrial PC is greatly improved because it features a DOM storage drive that uses non-volatile flash memory in place of a conventional hard disk drive.

■ Built-in Expandability

Two PCI bus slots are provided to facilitate system expansion. Two serial ports and four USB ports are also provided as standard features on the NSA-series CPU Box.

■ Touch Panel for Pointing Device Use

The NSA-series Box-type Industrial PC uses an analog touch panel to allow highly intricate operations.

■ RAS Functions

In addition to standard PC RAS functions, the NSA-series Box-type Industrial PC is provided with other unique RAS functions as standard equipment for even greater system reliability.

■ Fanless Design

A fanless air-cooled design was devised for the NSA-series Box-type Industrial PC to eliminate concerns about cooling fan failure.

■ High Reliability

The diskless, fanless design and unique RAS functions ensure high reliability for systems in which the NSA-series Box-type Industrial PC is used.

■ Front USB Ports

The NSA-series Touch Panel has USB hub functionality and provides three type-A USB ports and one type-B USB port. Two of the type-A USB ports can be accessed from the front, making operation easier.

■ Windows XP Embedded

Windows XP Embedded is an OS for embedded use. This OS includes an Enhanced Write Filter for improved reliability. Refer to *Appendix 2 Using the Enhanced Write Filter* for information.

1-2 Specifications

1-2-1 Ratings and Specifications

NSA-series CPU Box (NSA-CPU□□)

Item		CPU01	CPU02	CPU03	CPU04
OS		Preinstalled Windows XP Embedded			
Processor		1.3 GHz Intel Celeron® M Processor			
Storage device	Type	DiskOnModule (flash memory)			
	Capacity	2 Gbytes (See note 1.)	4 Gbytes (See note 1.)	2 Gbytes (See note 1.)	4 Gbytes (See note 1.)
	Service life (write times)	27 years (100,000 times/block) (See note 2.)			
Memory	Main memory	512-Mbyte DDR-SDRAM (No-ECC)		1-Gbyte DDR-SDRAM (No-ECC)	
	Cache memory	512-Kbyte Level 2 cache memory (built into the CPU)			
Interface	Keyboard	PS/2 keyboard with 6-pin Mini DIN connector			
	Mouse	PS/2 mouse with 6-pin Mini DIN connector			
	Serial ports	Two ports conforming to EIA RS-232C for 9-pin D-SUB male connectors			
	Ethernet	One 10 BASE-T/100 BASE-TX port for an RJ45 connector			
	USB ports	Two USB 2.0/1.1 ports for USB type A connectors (ports 0 and 1) and two USB 1.1 ports for USB type A connectors (ports 2 and 3)			
	CF Card	Type I CF Card, 1 slot			
	Video output	One DVI port for DVI-I connector			
	Audio	Line-In/Line-Out/Mic-In mini-jacks			
Expansion slots		PCI expansion bus, 2 slots			
Special RAS board	External input port	3-pin connector port for the UPS power interrupt signal			
	Status LED indicators	4 (RUN/BATLOW/ERR/DIAG)			
RAS functions	Special RAS board functions	Monitoring Function (alive, startup, and shutdown monitors), Action on Errors Function (forced shutdown and forced reboot), External Power Supply Monitor, Motherboard Operating Time Measurement, and Log Functions.			
	Motherboard RAS functions	Standard PC RAS information, post error logging, post error retry, CMOS data recovery			
POWER indicator		Yes (green)			
Service life		50,000 hours at 30°C (See note 3.)			
Battery life	Motherboard	5 years at 25°C (NSA-BAT01)			
	RAS board	5 years at 25°C (NSA-BAT01)			

Note 1: The file system is formatted in advance with NTFS. Both C and D drives have been created as partitions. The D drive is used by the OS and RAS Utility to store the event logs.

2: Calculation Conditions
Free area: 500 MB (not including the OS and applications)
Overwrite data size/time: 0.5 MB/time
Overwrite times/day: 10,000
MTBF: (500 MB x 100,000 times)/(0.5 MB x 10,000 times/day) = 10,000 days = 27 years.

3: The service life is a guideline that is provided strictly for reference. It varies with factors such as the installation location and operating conditions.

NSA-series Touch Panel (NSA-TX□□□/TY□□□)

Item		TX151B	TX151S	TY171B	TY171S
Display panel	Color	Black	Silver	Black	Silver
	Display	TFT color LCD			
	Display size	15.0 inches		17.0 inches	
	Pixels	1,024 × 768 dots (XGA)		1,280 × 1,024 dots (SXGA)	
	Brightness	270 cd/m^2 (typical) (See note 1.)		200 cd/m^2 (typical) (See note 1.)	
	Angle of vision	Horizontal: 130°, Vertical: 90°			
	Display colors	262,144 colors			
Backlight	Backlight	2 CCFL lights		4 CCFL lights	
	Brightness adjustment	Can be adjusted with a rotary switch or an external variable resistor (10 kΩ). (See note 2.)			
	Service life	50,000 hours min. (See note 3.)			
Touch panel	Method	Analog resistance film			
	Effective input area	305 × 229 mm		340 × 272 mm	
	Operation service life	10,000,000 operations (continuous keystroke input) 100,000 characters (continuous character input by pen)			
Interfaces	USB	USB 1.1: 3 ports with USB type-A connectors USB 1.1: 1 port with USB type-B connector			
	Video input	DVI: 1 port with DVI-D connector			
POWER indicator		Provided (green)			
Device service life		50,000 hours at 30°C (See note 4.)			

Note 1: This contrast value is strictly a reference value at maximum contrast.
2: The contrast cannot be adjusted significantly.
3: The service life is a guideline for maximum contrast at room temperature with normal humidity and is provided strictly for reference. It varies significantly with the ambient temperature. The service life will be shorter under extreme (high or low) temperature conditions and falls off sharply particularly under low-temperature conditions.
4: The service life is a guideline that is provided strictly for reference. It varies with factors such as the installation location and operating conditions.

1-2-2 General Specifications

Item	NSA-CPU□□	NSA-TX151B/S	NSA-TY171B/S
Rated supply voltage	24 V DC		
Allowable supply voltage range	20.4 V DC to 27.6 V DC (24 V DC±15%)		
Power consumption	60 W max.	40 W max.	55 W max.
Ambient operating temperature	0 to 50°C (See notes 1 and 2.)		
Ambient storage temperature	–10 to 60°C		
Ambient operating humidity	10% to 80% with no condensation		
Ambient storage humidity	10% to 85% with no condensation		
Operating atmosphere	Must be free of corrosive gases. Must be fairly dust free.		
Noise resistance	Conforms to IEC6100-4-4, power supply line: 2 kV		
Vibration resistance (in operation)	Conforms to JIS C0041, 0.05-mm amplitude at 10 to 55 Hz for 50 min each in the X, Y, and Z directions		
Shock resistance (in operation)	Conforms to JIS C0041, 196 m/s^2 three times each in the X, Y, and Z directions		
Dimensions (excluding protrusions)	308 × 233 × 76.5 mm (W × H × D)	404 × 328 × 57 mm (W × H × D)	436 × 371 × 57 mm (W × H × D)
Weight	4 kg max.	6 kg max.	7 kg max.
Degree of protection	–	Front panel: IP65 or the equivalent (display side only) (See note 3.)	

Note 1: The ambient operating temperature may be restricted as described below depending on whether an Expansion PCI Board is installed, the type of Board installed, and the installation angle.

1-1 No Expansion PCI Board or One of the Following Expansion PCI Boards Installed

- 3G8F7-CLK21-V1 Controller Link Board (hereafter CLK Board)
- CS1PC-PCI01-DRM SYSMAC CS1 Board (hereafter CS1 Board)

Installation angle off horizontal	Ambient operating temperature (excluding the Memory Card)
0° or greater but less than 15°	0 to 25°C
15° or greater but less than 30°	0 to 30°C
30° or greater but less than 60°	0 to 35°C
60° or greater but less than 90°	0 to 40°C
90°	0 to 50°C

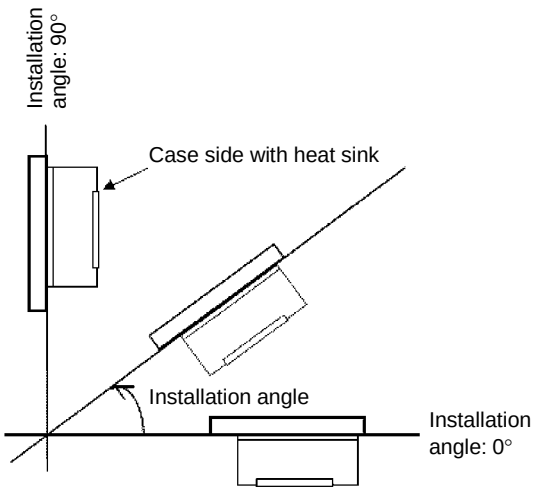

The above illustration shows the NSA-CPU□□ and NSA-TX□□□/TY□□□ mounted together.

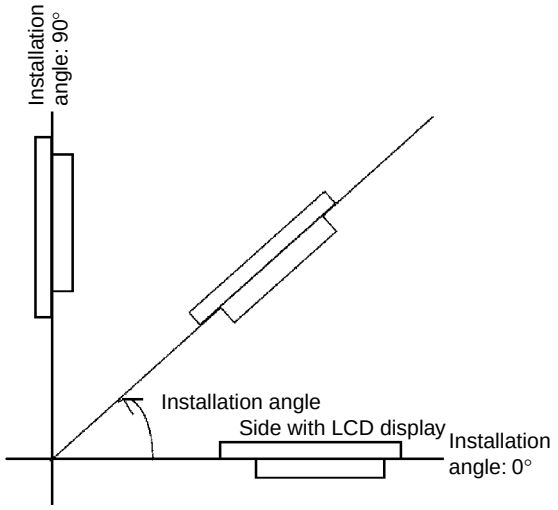

The above illustration shows the NSA-TX□□□/TY□□□ mounted by itself.

1-2. Expansion PCI Board Other Than a CLK Board or CS1 Board Installed

PCI slot No.	PCI Board internal temperature rise
PCI slot 1	11°C
PCI slot 2	16°C

The internal temperature rise of a PCI Board mounted in slot 1 or 2 is as shown in the table above. Determine the ambient operating temperature by taking the ambient operating temperature listed in table in *1-1*, above, as the upper limit, and considering the ambient operating temperature of the mounted Expansion PCI Board. Check prior to actual use that the Expansion PCI Board will operate properly within the selected ambient operating temperature range.

1-3. Ambient Operating Temperature

The ambient operating temperature is the temperature at a point 50 mm from the center of the back of the Unit, and it includes the heat generated by the Unit itself.

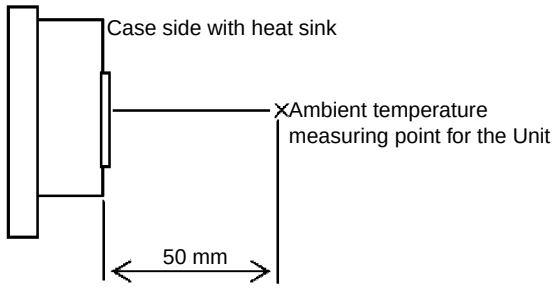

The above illustration shows the NSA-CPU□□ and NSA-TX□□□/TY□□□ mounted together.

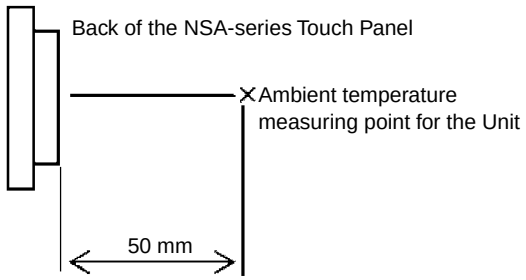

The above illustration shows the NSA-TX□□□/TY□□□ mounted by itself.

Note 2: Use the temperature and humidity ranges in the following diagram.

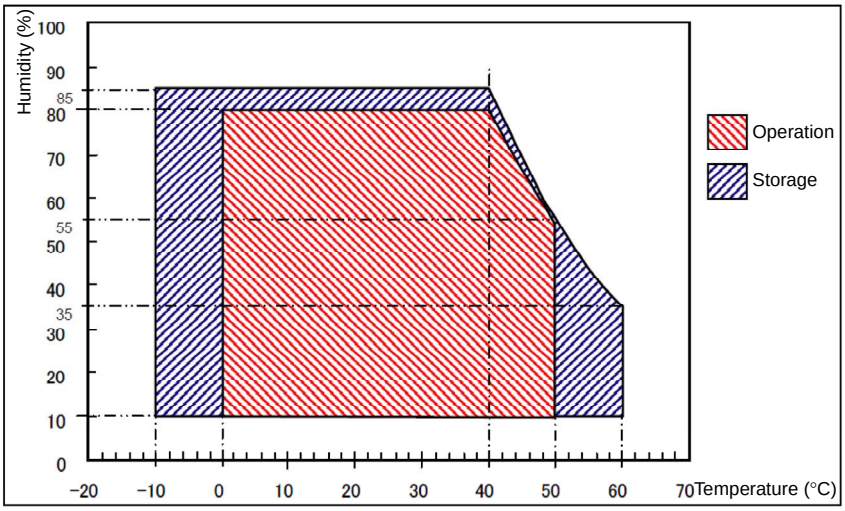

Note 3: The Industrial PC may not operate properly in locations subjected to oil splashes for extended periods of time.

1-2-3 Dimensions and Appearance

NSA-series CPU Box (NSA-CPU□□)

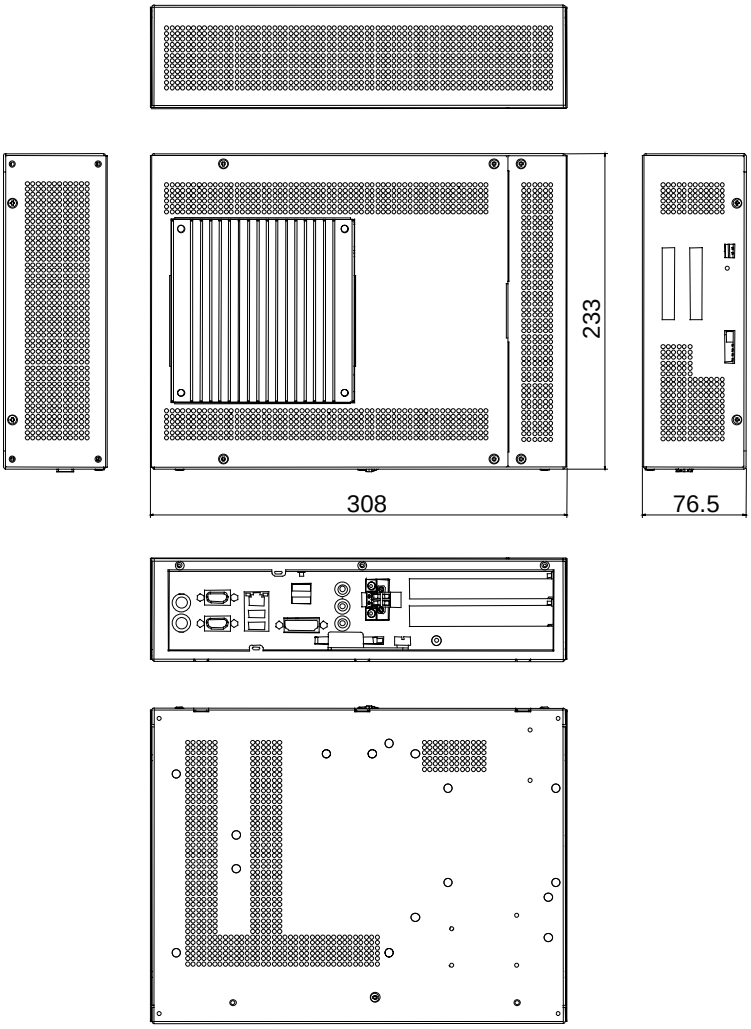

NSA-series Touch Panel (NSA-TX151B/S)

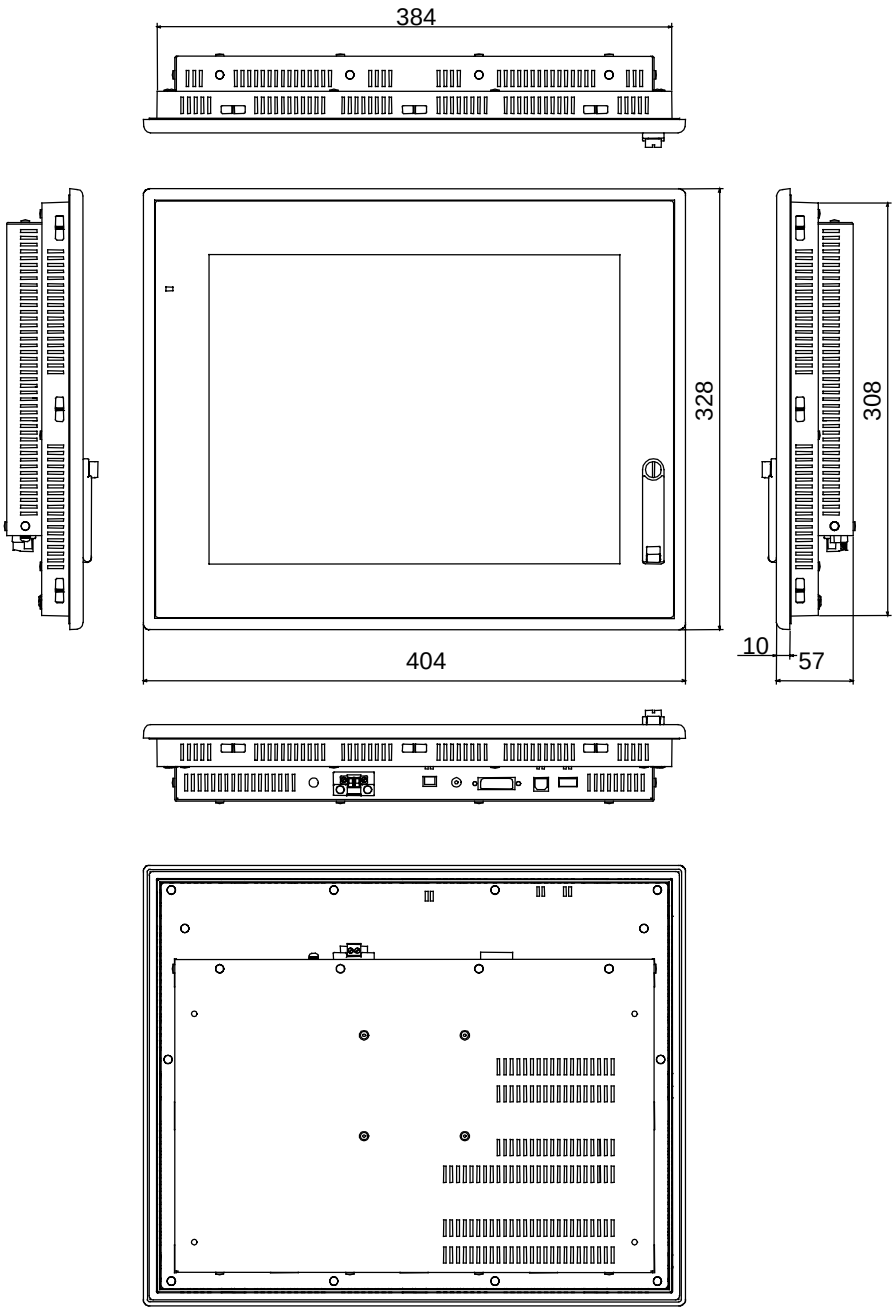

NSA-series Touch Panel (NSA-TY171B/S)

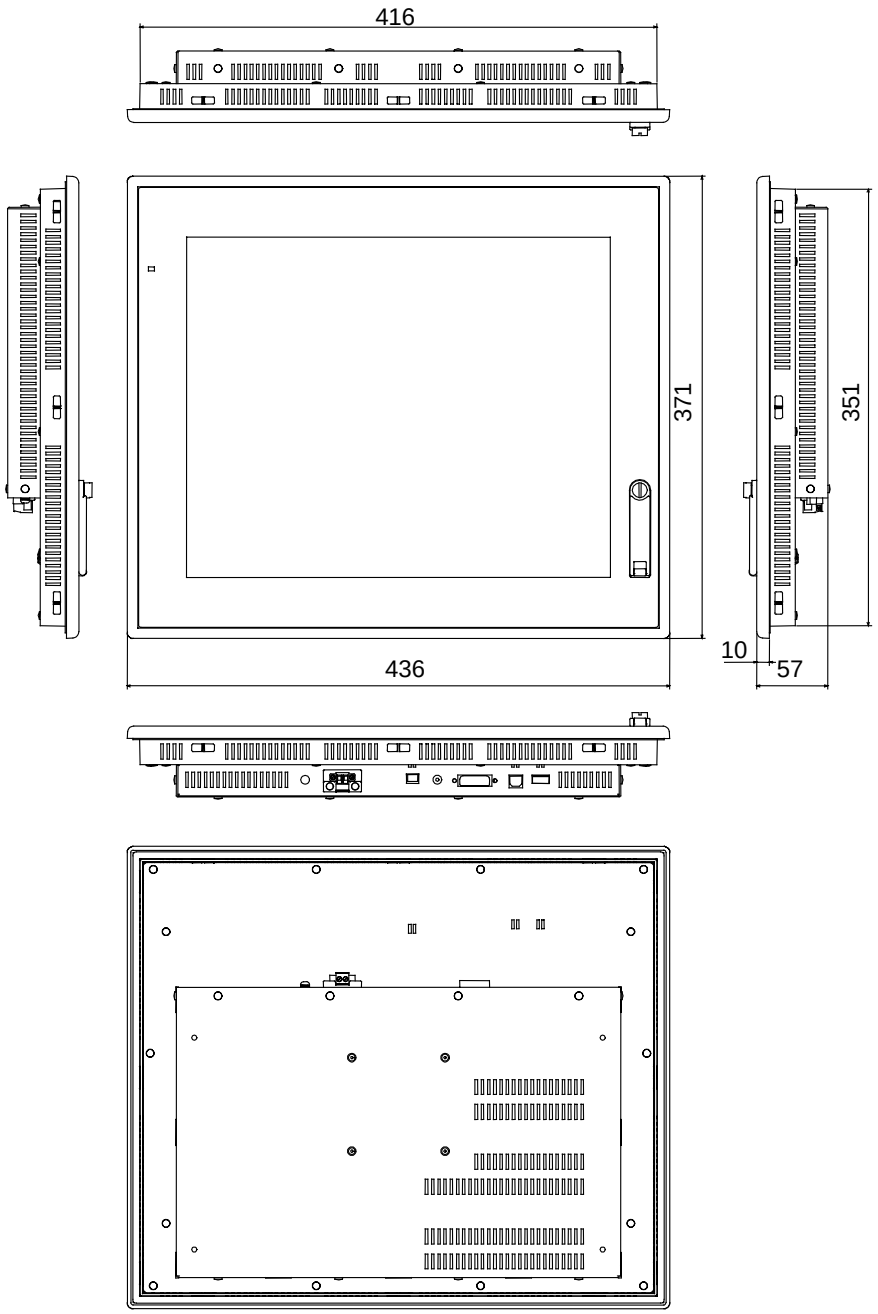

Combinations

- **NSA-series CPU Box (NSA-CPU□□) with NSA-series Touch Panel (NSA-TX151B/S)**

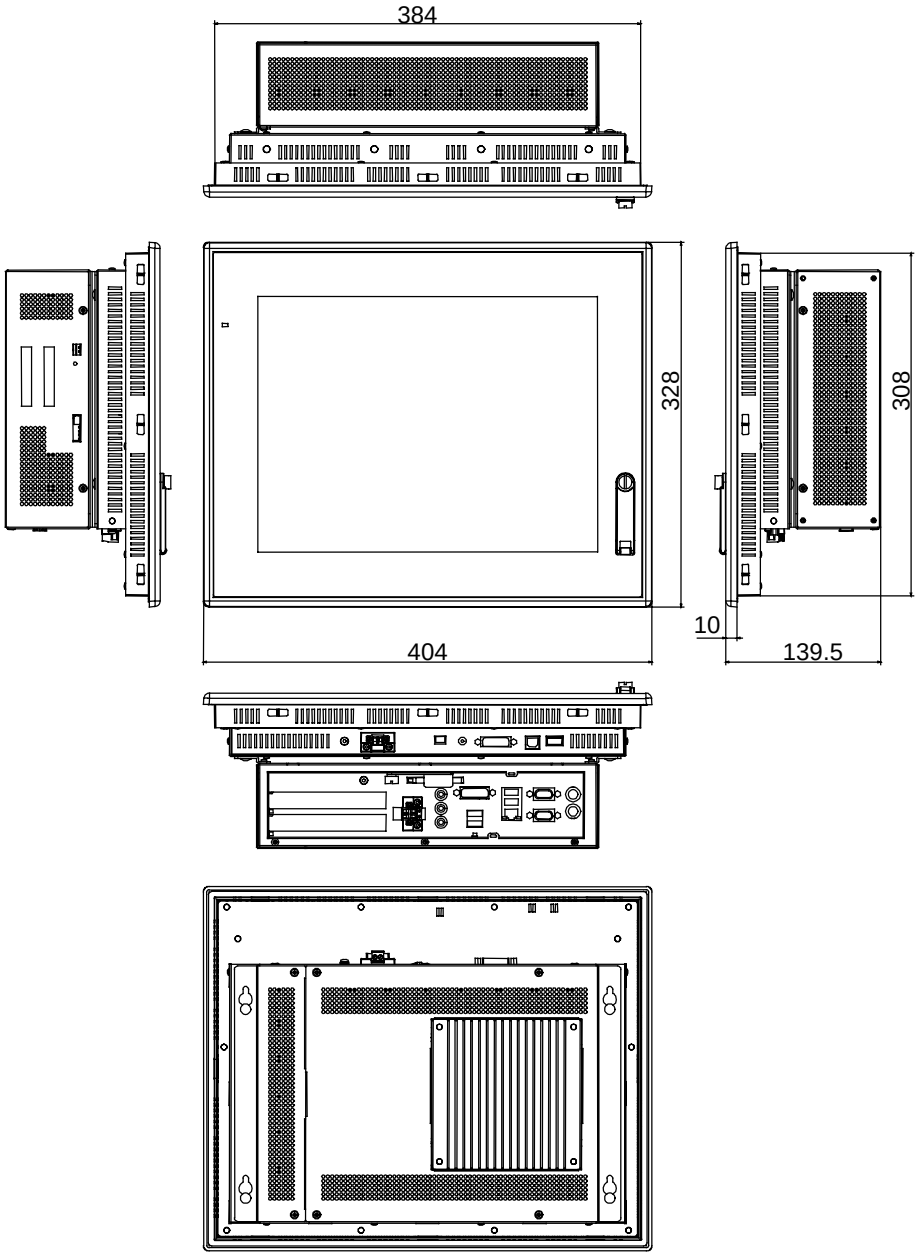

- **NSA-series CPU Box (NSA-CPU□□) and NSA-series Touch Panel (NSA-TY171B/S)**

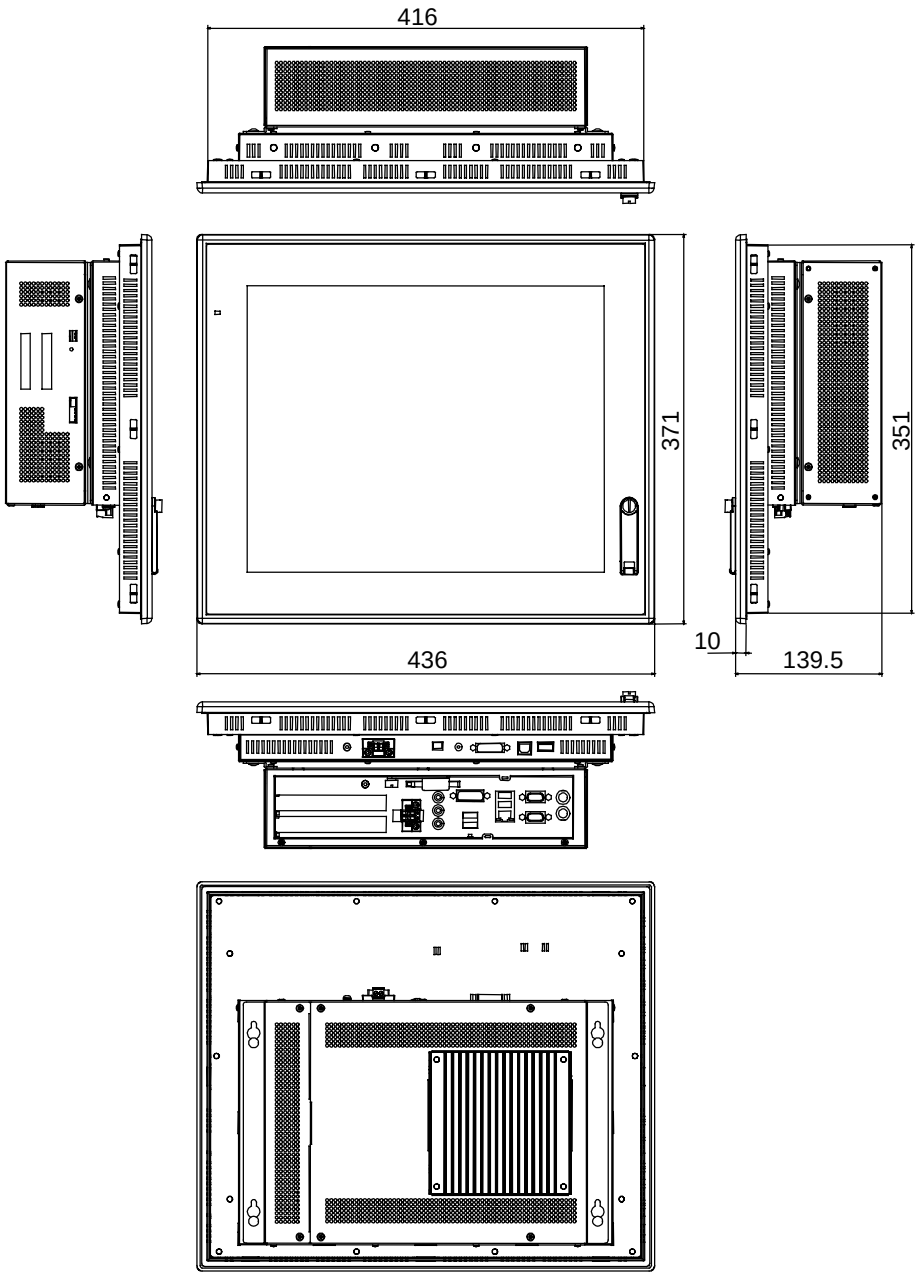

Section 2

Nomenclature

2-1 Nomenclature

2-1-1 NSA-series CPU Box Part Names and Functions

Front and Sides

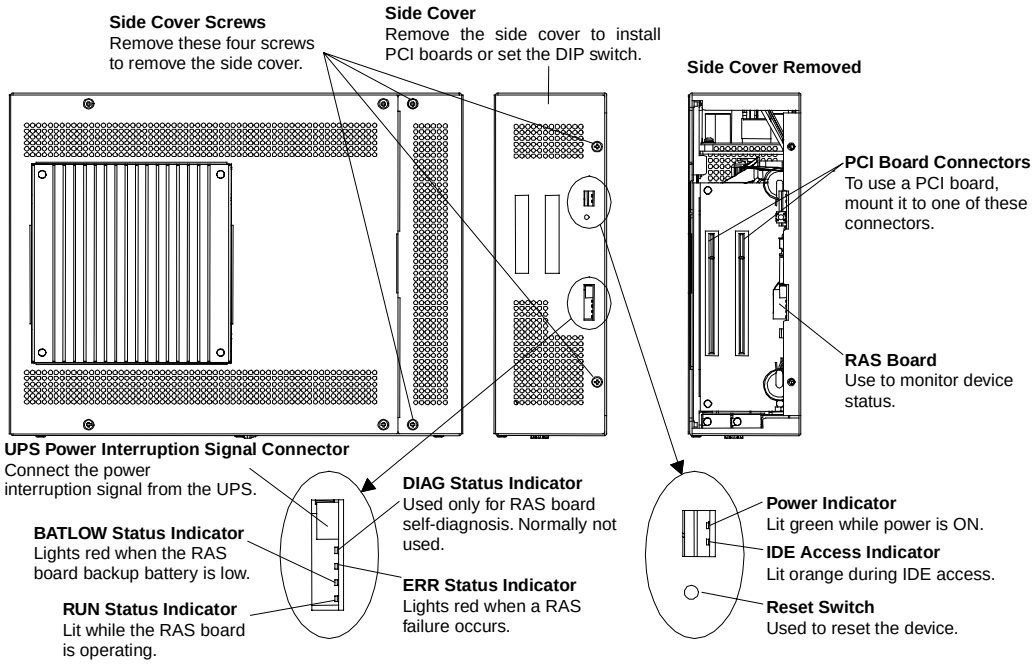

Connector Panel

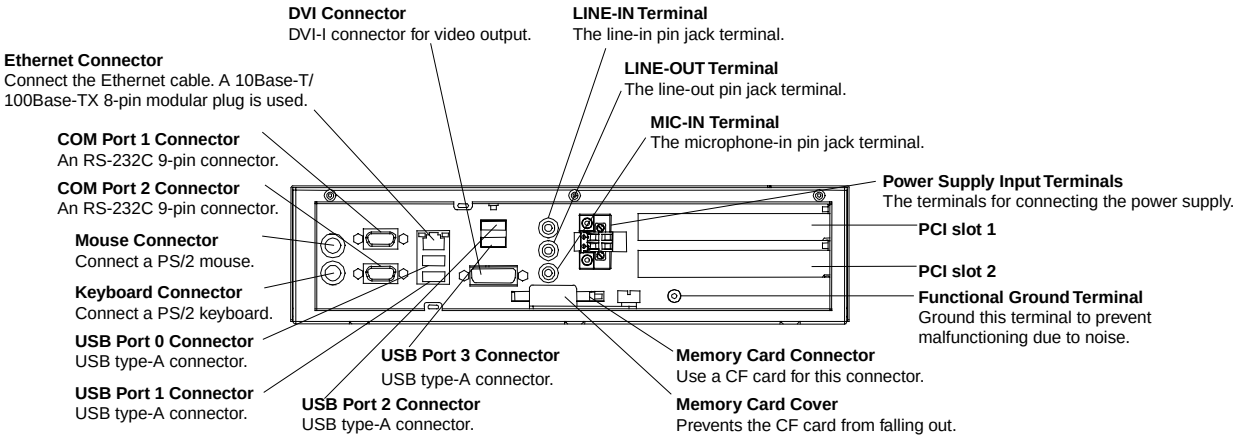

2-1-2 NSA-series Touch Panel Part Names and Functions

Front

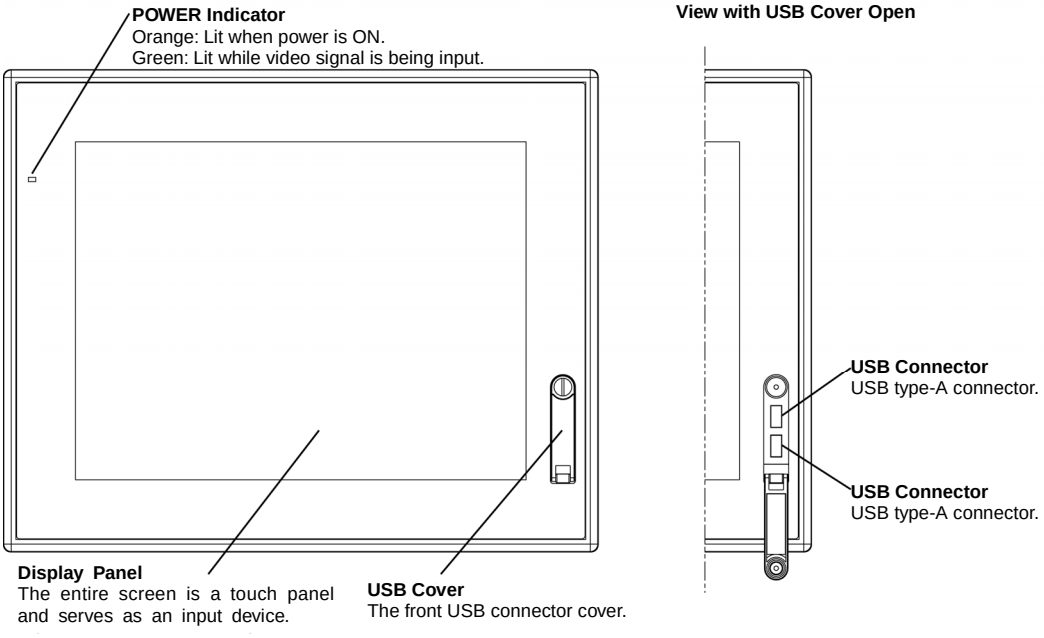

Connectors

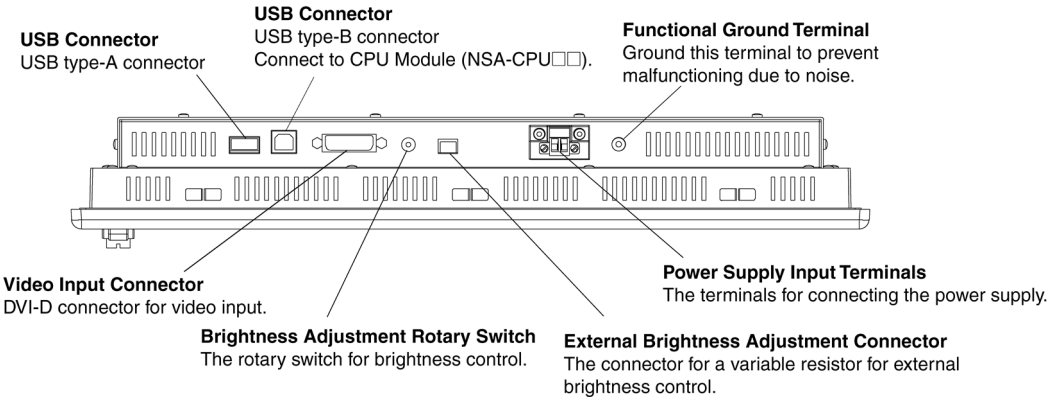

2-1-3 Connectors and Interfaces

NSA-series CPU Box

■ USB Connector (USB Ports 0, 1, 2 and 3)

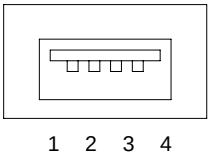

NSA-series CPU Box Connector: USB Type A Standard Connector

Pin No.	Signal
1	V_{BUS}
2	D–
3	D+
4	GND

■ RS-232C Connector (COM Ports 1 and 2)

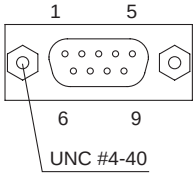

NSA-series CPU Box Connector: D-sub 9-pin Male Connector (See note.)

Pin No.	Signal	
1	CD	Carrier Detect
2	RD	Receive
3	SD	Send
4	DTR	Data Terminal Ready
5	GND	Signal ground
6	DSR	Data Set Ready
7	RTS	Request To Send
8	CTS	Clear To Send
9	RI	Ring Indicator

Note: Use #4-40 UNC inch screws for the NSA-series CPU Box connector screws.

■ Ethernet Connector

100-Mbps LINK Indicator
The green lamp is lit for 100-Mbps connection.

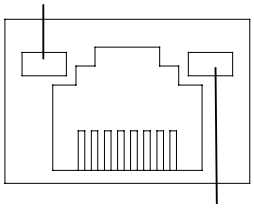

TX/RX ACT Indicator
The orange lamp is lit when sending or receiving via Ethernet.

NSA-series CPU Box Connector: RJ45

Pin No.	Signal	
1	TD+	Twisted pair send +
2	TD-	Twisted pair send –
3	RD+	Twisted pair receive +
4	NC	Not used
5	NC	Not used
6	RD-	Twisted pair receive –
7	NC	Not used
8	NC	Not used

Note Confirm the safety of the system before turning the power ON or OFF.

■ PS/2 Keyboard Connector

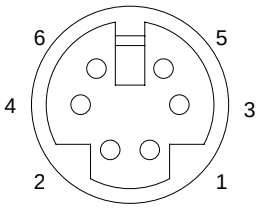

NSA-series CPU Box Connector: Mini-DIN 6-pin Female Connector

Pin No.	Signal	
1	DATA	Keyboard data
2	NC	Not used
3	GND	Signal ground
4	+5V	+5 V output
5	CLK	Keyboard clock
6	NC	Not used
6	NC	Not used

Note: Connect the keyboard directly to this connector

■ PS/2 Mouse Connector

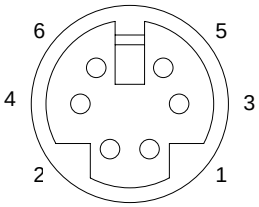

NSA-series CPU Box Connector: Mini-DIN 6-pin Female Connector

Pin No.	Signal	
1	DATA	Mouse data
2	NC	Not used
3	GND	Signal ground
4	+5V	+5 V output
5	CLK	Mouse clock
6	NC	Not used

Note: Connect the mouse directly to this connector.

■ UPS Power Interrupt Signal Connector

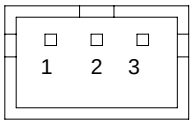

NSA-series CPU Box Connector: S3B-PH-K-S (JST)

Pin No.	Signal
1	ACFAIL
2	NC
3	COM

Note: Set the ACFAIL input voltage to 24 V±10%.

- **Equivalent Input Circuit**
  The NSA-series Box-type Industrial PC can read a power interrupt detection signal from the UPS by supplying power after an open condition occurs between the input connector terminals or by creating an open condition between the input connector terminals after power is supplied.

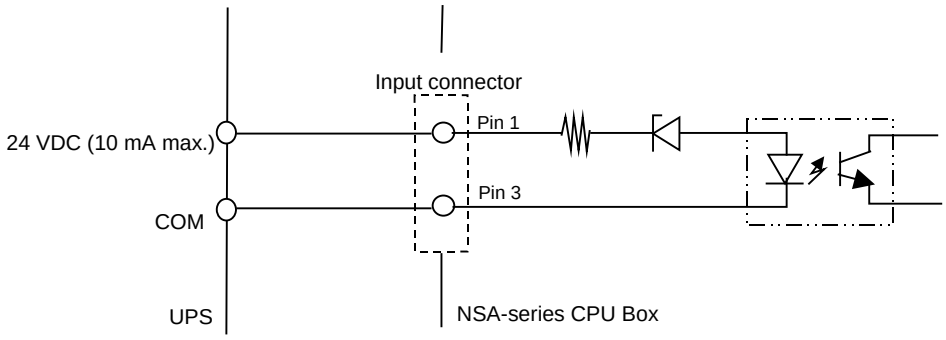

■ Video Signal Connector

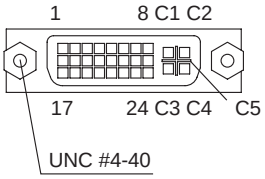

NSA-series CPU Box Connector: DVI-I Connector

Pin No.	Signal name	Pin No.	Signal name
1	TMDS TX2–	16	Hot Plug Detect
2	TMDS TX2+	17	TMDS TX0–
3	TMDS TX2/4 GND	18	TMDS TX0+
4	NC	19	TMDS TX0/5 Shield
5	NC	20	NC
6	SCL (DDC Clock)	21	NC
7	SDA (DDC Data)	22	TMDS CLK GND
8	VGA VSYNC	23	TMDS CLK+
9	TMDS TX1–	24	TMDS CLK–
10	TMDS TX1+	-	
11	TMDS TX1/3 Shield	C1	VGA RED (Analog)
12	NC	C2	VGA GREEN (Analog)
13	NC	C3	VGA BLUE (Analog)
14	+ 5V	C4	VGA HSYNC
15	GND	C5	VGA GND (Analog)

Note: TMDS: Transition Minimized Differential Signaling
Use #4-40 UNC inch screws for the NSA-series CPU Box connector screws.

■ Audio Pin Jack Terminals

NSA-series CPU Box Connector: Pin Jack Terminals

Color	Signal name
Blue	LINE-IN
Green	LINE-OUT
Red	MIC-IN

NSA-series Touch Panel

■ USB Connectors (3 Ports)

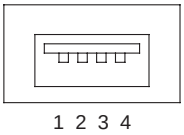

NSA-series Touch Panel Connectors: USB Type-A Standard Connectors

Pin No.	Signal name
1	VBUS
2	D–
3	D+
4	GND

■ USB Connector (1 Port)

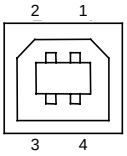

NSA-series Touch Panel Connector: USB Type-B Standard Connector

Pin No.	Signal name
1	VBUS
2	D–
3	D+
4	GND

■ Video Input Connector

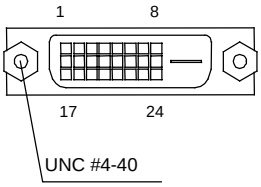

NSA-series Touch Panel Connector: DVI-D Connector

Pin No.	Signal name	Pin No.	Signal name
1	TMDS TX2–	13	NC
2	TMDS TX2+	14	+5 V
3	TMDS TX2/4 GND	15	GND
4	NC	16	Hot Plug Detect
5	NC	17	TMDS TX0–
6	SCL (DDC Clock)	18	TMDS TX0+
7	SDA (DDC Data)	19	TMDS TX0/5 Shield
8	VGA VSYNC	20	NC
9	TMDS TX1–	21	NC
10	TMDS TX1+	22	TMDS CLK GND
11	TMDS TX1/3 Shield	23	TMDS CLK+
12	NC	24	TMDS CLK–

Note: TMDS: Transition Minimized Differential Signaling
Use #4-40 UNC inch screws for the NSA-series Touch Panel connector screws.

Note: Use one of the following DVI and USB Cables to the NSA-series CPU Box and NSA-series Touch Panel.
These Cables are sold separately.

Model	Cable length		Remarks
	DVI	USB	
NSA-DU02	0.1 m	0.1 m	For stacked connection
NSA-DU22	2.0 m	2.0 m	---
NSA-DU52	5.0 m	5.0 m	---

Note

- Never use a chemically treated cloth or volatile solvents, such as benzene or thinner, to clean the NSA-series Box-type Industrial PC.
- Input may fail if the touch panel is pressed continually at high speed. Confirm each input before moving on to the next entry.
- If the same image is left on the screen for an extended period of time, that image will be burned into the screen permanently. Use the burn-in prevention function or periodically change the screen to prevent permanent damage to the screen.
- The entire system may shut down depending on how the power is turned ON or OFF. Follow the correct procedure for turning the power ON or OFF.

- **External Variable Resistor Connector for Brightness Adjustment**
  Connector on NSA-series Touch Panel: S2B-PH-SM3-TB (JST)

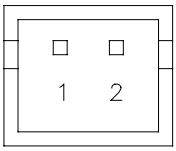

Pin No.	Signal
1	BKLTCON
2	COM

Refer to *3-6-2 Adjusting the Brightness* for the adjustment procedure using an external variable resistor.

Section 3

Installing the NSA-series Box-type Industrial PC and Connecting Peripheral Devices

3-1 Basic Operating Procedures

- **Monitor Connection Precautions**
  The NSA-series Box-type Industrial PC consists of a CPU Box (NSA-CPU□□) and Touch Panel (NSA-TX□□□/TY□□□). Use an NSA-TX□□□ or NSA-TY□□□ as the monitor to connect to the CPU Box. Operation may be incorrect if any other monitor is connected.

This section describes the basic steps for operating the NSA-series Box-type Industrial PC.

Step 1 Install any PCI Boards in the NSA-series CPU Box and set the DIP switch (required when using a PCI Board or Special RAS Board monitoring functions).

In the following situations, remove the side cover from the NSA-series CPU Box and install the PCI Boards and set the DIP switch before installing the NSA-series CPU Box in a panel.

- To install and use a PCI Board
- To enable the RAS Board's special Action on Error monitoring function (forced shutdown or forced reboot)
- To set the method for using the external input port (UPS power interrupt signal connector)
- To set the ACFAIL signal input method for the external input port (UPS power interrupt signal connector) to "Normally supplies 24 V; Open at PWR-FAIL"

Refer to *3-2 Installing a PCI Board and Setting the DIP Switch*.

Step 1-1	Remove the side cover.

↓

Step 1-2	Set the DIP Switch.

↓

Step 1-3	Install the PCI Board.

↓

Step 1-4	Reattach the side cover.

↓

■ Step 2 Install the NSA-series Box-type Industrial PC and wire it to the operating panel.

Refer to *3-3-2 Installing the NSA-series Industrial PC in a Control Panel*.

↓

■ Step 3 Connect the NSA-series Touch Panel and PS/2 port.

Connect the CPU Box (NSA-CPU□□) and the Touch Panel (NSA-TX□□□/TY□□□) by using a USB cable and DVI cable.

Note: The DVI cable and USB cable required to connect the CPU Box and the Touch Panel are sold separately.

Model	Cable length		Remarks
	DVI	USB	
NSA-DU02	0.1 m	0.1 m	For stacked connection
NSA-DU22	2 m	2 m	
NSA-DU52	5 m	5 m	

Be sure to connect the CPU Box and Touch Panel before turning ON the power supply. If a PS/2 keyboard or mouse is to be used with the NSA-series CPU Box, connect these devices before turning ON the power.
Note: Connect the keyboard and mouse directly the PS/2 connectors without inserting a signal selector or other device.

↓

■ Step 4 Turn ON the 24 VDC external power supply and start the operating system.

Refer to *3-3-3 Connecting the Power Supply* and connect the cable to the power supply connector on the CPU Box and connect the cable to the power supply connector on the Touch Panel.
Refer to 3-3-4 Connecting the Grounding Wire and connect the CPU Box and the Touch Panel to their respective ground wires.
After making the connections, supply 24 VDC first to the Touch Panel and then to the CPU Box. The NSA-series Box-type Industrial PC will turn ON, and the OS will start.
Note 1: Never connect an AC power supply. Doing so will damage the NSA-series Box-type Industrial PC.
2: Do not start the NSA-series CPU Box before turning ON the power to the NSA-series Touch Panel.
If the NSA-series CPU Box is started first, the NSA-series Touch Panel display will not appear.

Note

- The startup and shutdown monitoring functions available from the special RAS Board enable operating system monitoring to determine whether or not the OS started up a specified amount of time after the power was turned ON or a specified amount of time after the system shutdown.
- The C: and D: drives are defined in the NSA-series CPU Box. When a Memory Card is being used, use a drive letter other than C: or D:.
- When connecting a PS/2 keyboard, attach the ferrite core (included with the NSA-series CPU Box) to the keyboard cable. Attach the ferrite core at the keyboard end and wrap the cable once around the ferrite core.

↓

■ Step 5 Adjust the touch panel and display.

Adjust (calibrate) the touch panel positioning as needed.

- Refer to *3-6-1 Calibrating the NSA-series Box-type Industrial PC Touch Panel.*

↓

■ Step 6 Start up the application.

3-2 Installing a PCI Board and Setting the DIP Switch

Follow the steps below to install a PCI Board in the NSA-series CPU Box or to change the default setting of the DIP switch.

■ Removing the Side Cover

Note Be sure to turn OFF the NSA-series Box-type Industrial PC power supply (external input power supply) before you remove the side cover and set the DIP switch.

1. Turn OFF the NSA-series Box-type Industrial PC power supply (external input power supply) and loosen the four screws securing the side cover.

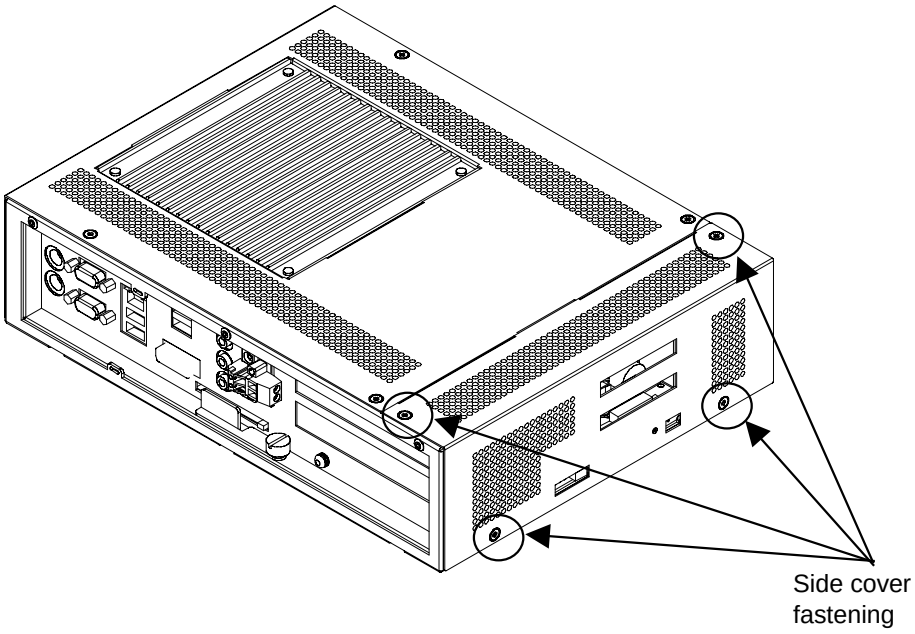

2. Remove the side cover.

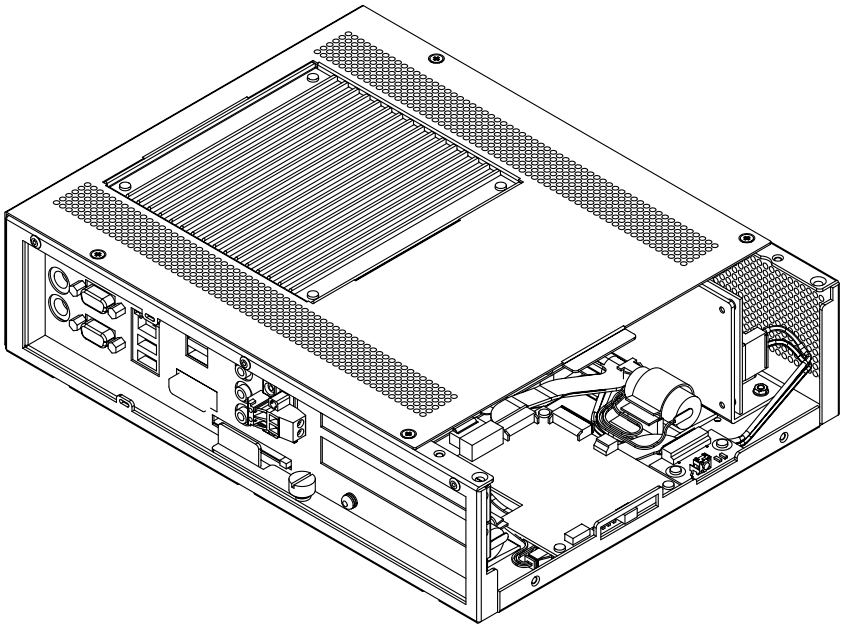

■ Setting the DIP Switch

Set the DIP switch only to enable the RAS Board's special Action on Error monitoring function or to set the usage method and the ACFAIL signal input method for the external input port (UPS power interrupt signal connector) to "Normally supplies 24 V; Open at PWR-FAIL."

- **Setting the DIP Switch**

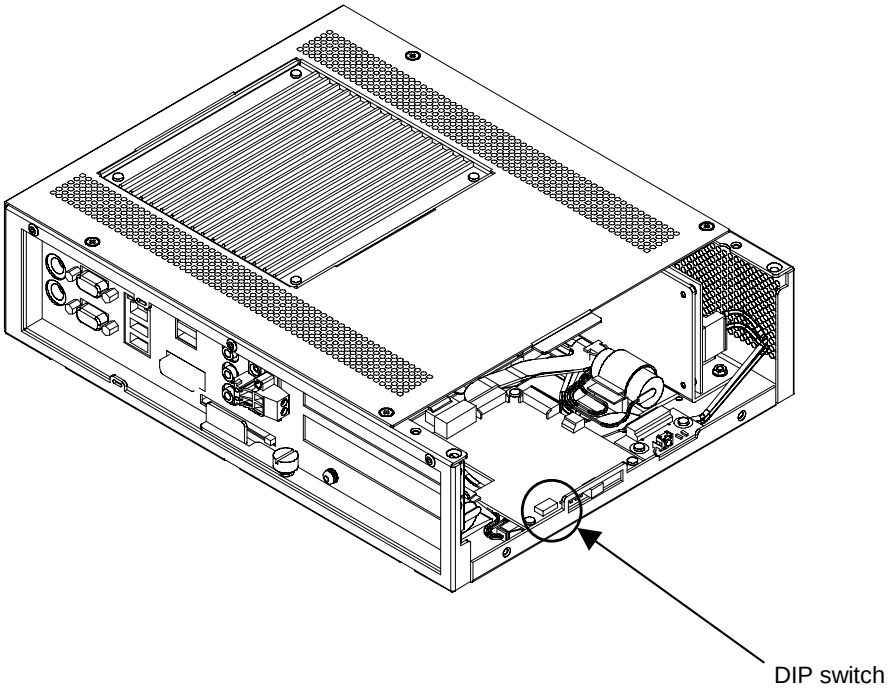

RAS Function Settings (Hardware Settings)

Pin No.	Function
1	Not used (Default setting: OFF)
2	Not used (Default setting: OFF)
3	Not used (Default setting: OFF)
4	Not used (Default setting: OFF)
5	Specifies the method for using the external input port (UPS power interrupt signal connector). ON: Use for UPS connection. OFF: Use as general input port (default setting).
6	Specifies the ACFAIL signal input method for the external input port (UPS power interrupt signal connector). (See note.) ON: Normally supplies 24 V; Open at PWR-FAIL. OFF: Normally open; supplies 24 V at PWR-FAIL. (Recommended/default setting.)
7	Always OFF
8	Enables or disables the Action on Error operation of the special RAS Board monitoring functions (alive, startup, and shutdown monitoring). ON: Disables operation if there is an error. OFF: Enables operation even if there is an error (default setting).

Note: Select the appropriate input method for the system you are using.

■ Installing a PCI Board

1. Remove the single screw shown in the figure below to detach the metal plate cover for the PCI slot.

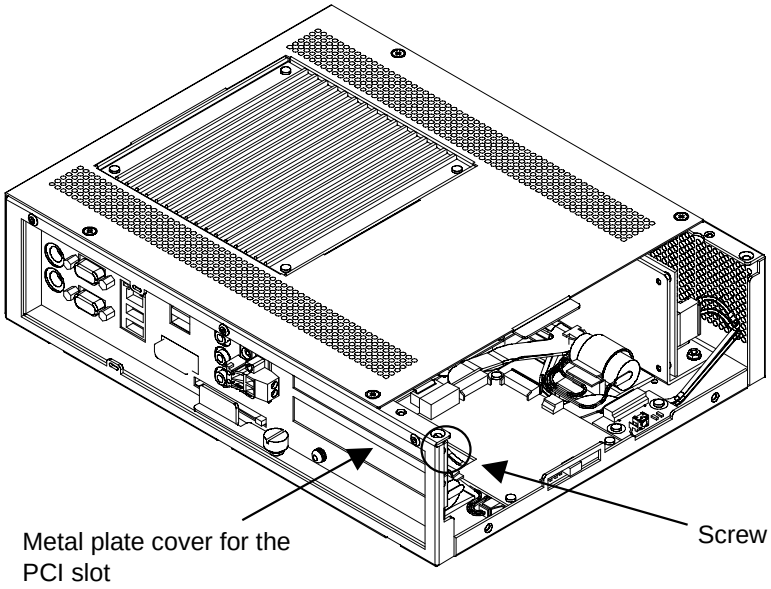

2. Insert the PCI Board into the PCI Board mounting connector.

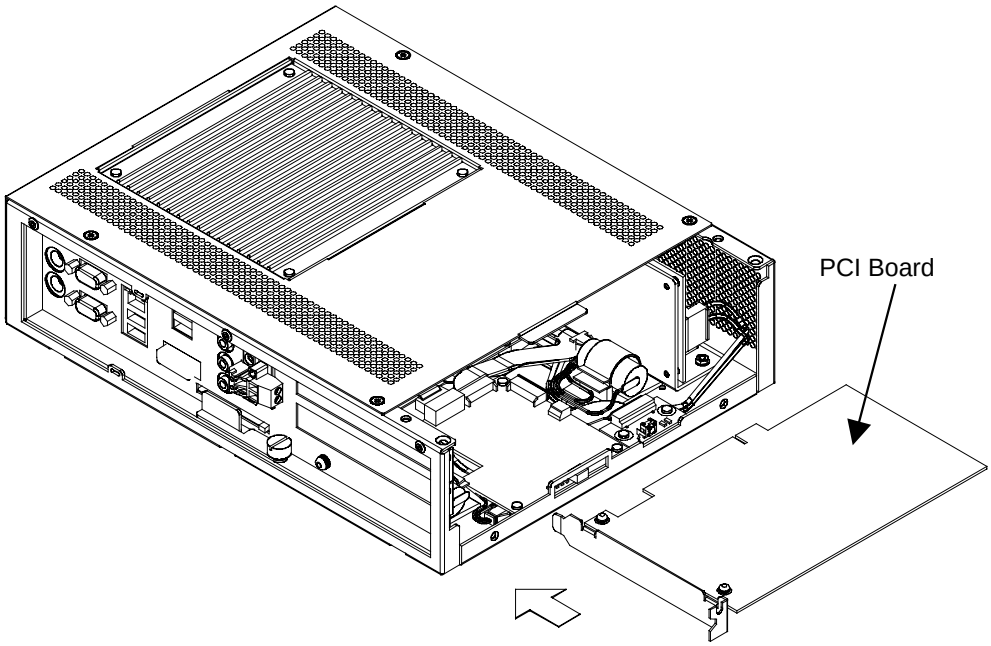

3. Secure the PCI Board with the screw that had secured the PCI slot cover to the metal plate cover.

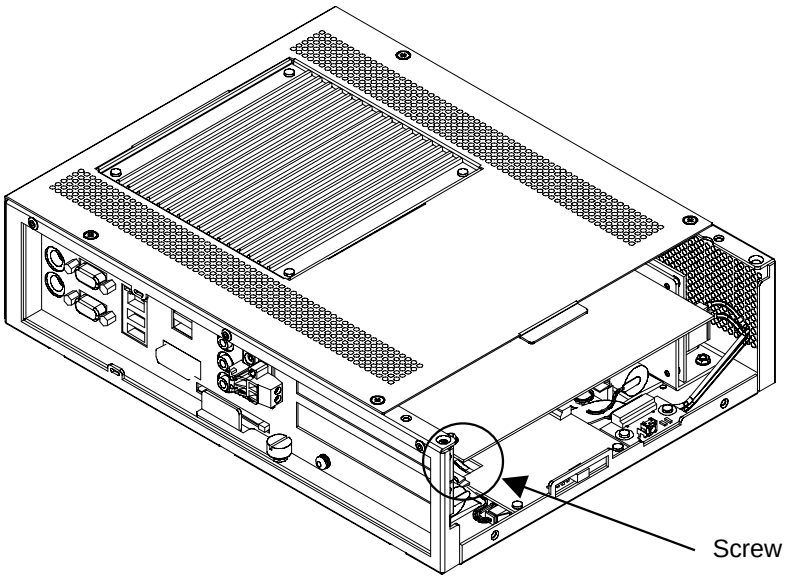

■ Reattaching the Side Cover

Reattach the side cover and tighten the four screws that were loosened to remove the cover.

Note

- Use a PCI Board that complies with the EMC Directive. If a PCI Board that does not comply with the EMC Directive is used, there are certain measures that the user must take.
- Be sure to turn OFF the NSA-series Box-type Industrial PC power supply (external power supply) before you remove the side cover and install or remove a PCI Board.
- Refer to the following diagram for mountable board sizes.
- Check the PCI Board that will be used to make sure it operates properly prior to actual operation.
- The maximum power available at the two PCI Board slots is 5 VDC/2.1 A and 3.3 VDC/1.0 A, respectively.
- There may be ambient operating temperature restrictions depending on the PCI Board that is used. Make sure the Board is operating within the stipulated temperature range.

■ Reference Diagram for PCI Board Size

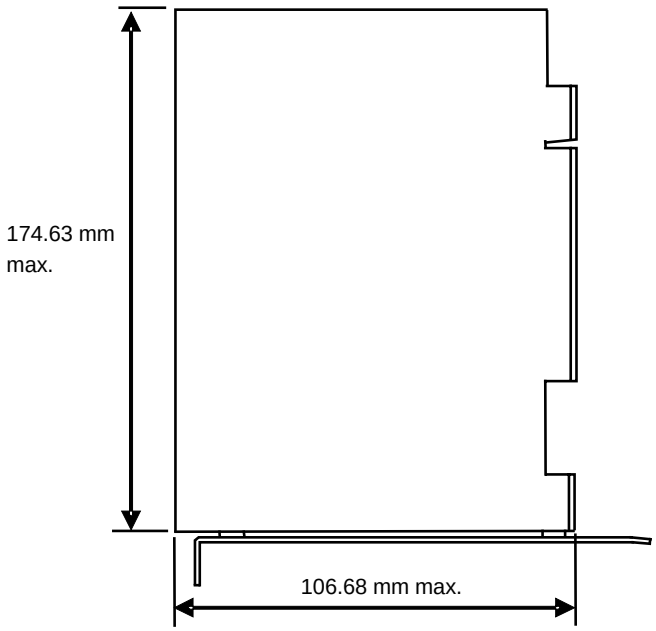

■ Dimensional Reference Diagram with PCI Board Mounted

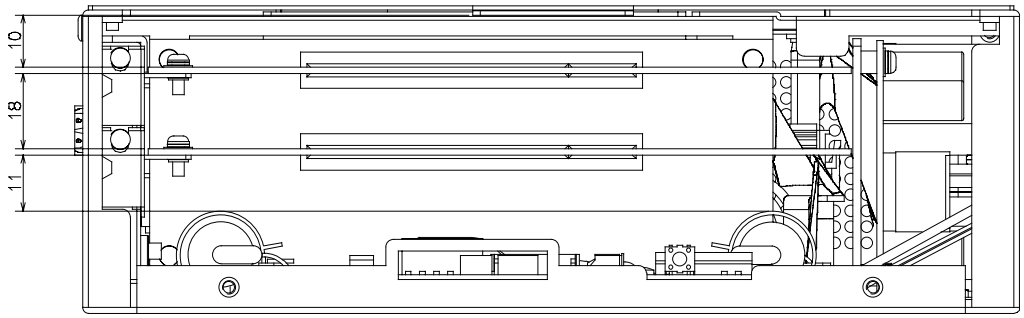

Note Be sure to check the PCI Board in the actual equipment to make sure it will operate properly after it is installed.

3-3 Installing the NSA-series Box-type Industrial PC

3-3-1 Environment

Observe the following points for panel mounting and other NSA-series Box-type Industrial PC installations.

Note Do not install the Unit in the following places:

- Locations subject to severe temperature changes
- Locations subject to temperatures or humidity outside the range specified in the specifications
- Locations subject to condensation as the result of severe changes in humidity
- Locations subject to exposure to chemicals and other harsh substances.
- Locations subject to intense exposure to oil
- Locations subject to corrosive or flammable gases
- Locations subject to shock or vibration
- Outdoor locations subject directly to wind and rain
- Locations subject to intense ultraviolet rays

Take appropriate and sufficient countermeasures when installing systems in the following locations:

- Locations subject to static electricity or other forms of noise
- Locations subject to strong electromagnetic fields
- Locations close to power supplies
- Locations subject to possible exposure to radioactivity

Note When unpacking the product, check carefully for any external scratches or other damage. Also, shake the product gently and check for any abnormal sound.

3-3-2 Installing the NSA-series Box-type Industrial PC in a Control Panel

The NSA-series Box-type Industrial PC is normally mounted in a panel. Follow the steps below to mount the Unit.

■ NSA-series CPU Box (NSA-CPU□□)

1. Drill four M4 mounting screw holes in the panel.

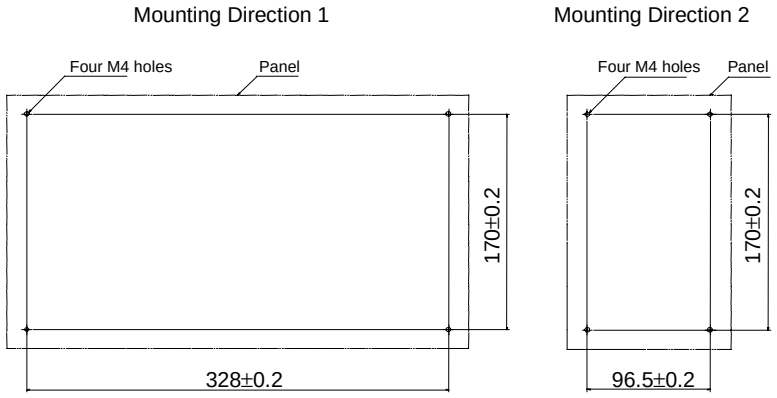

2. Attach the two Mounting Brackets (provided) to the NSA-series CPU Box with the four M3 screws (provided).

Mounting Direction 1

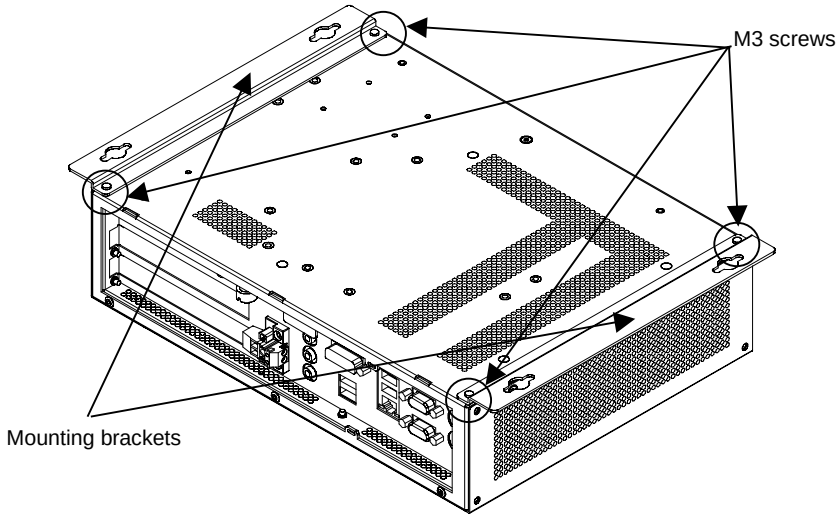

Mounting Direction 2

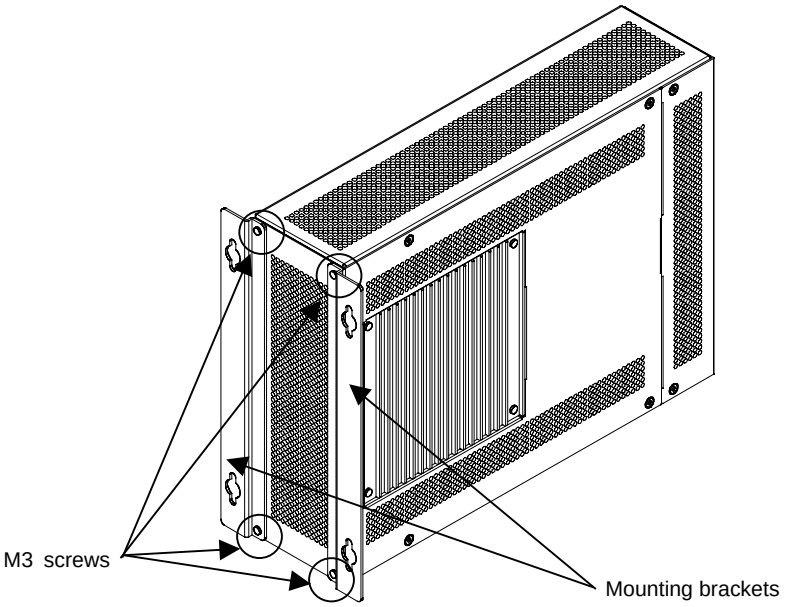

3. Mount the NSA-series CPU Box to the panel with the four M4 screws provided.

Mounting Direction 1

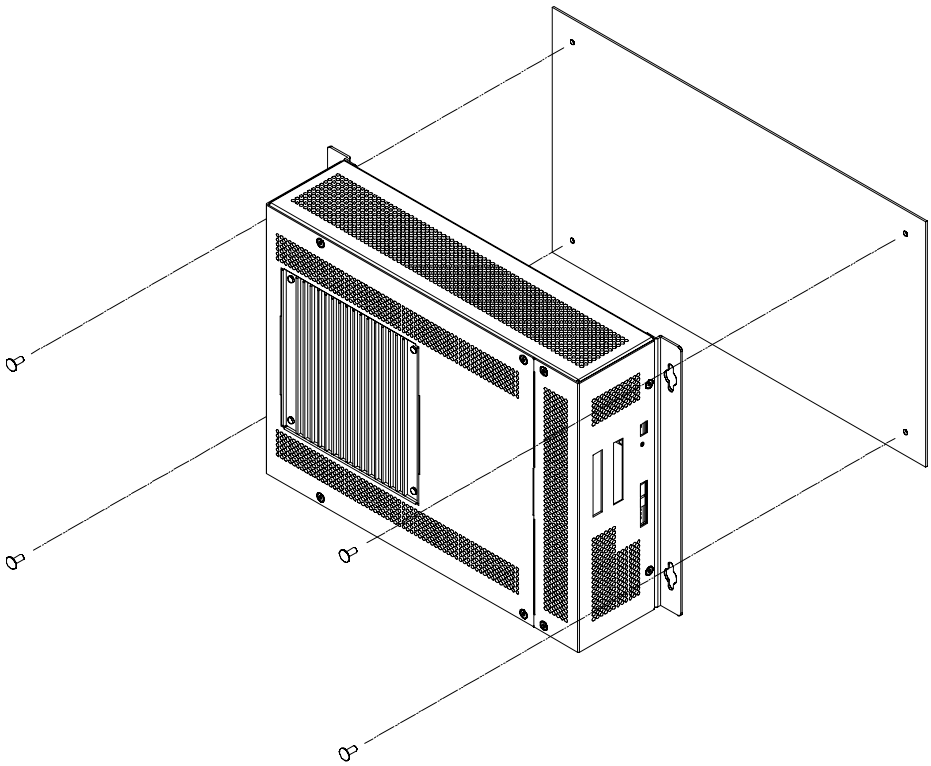

Mounting Direction 2

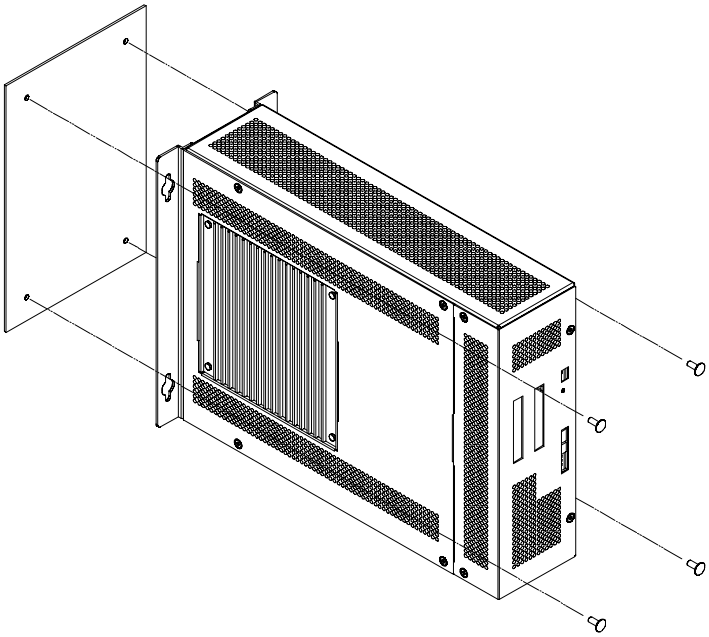

■ NSA-series Touch Panel (NSA-TX□□□/TY□□□)

1. Cut the mounting hole out from the panel.

Panel thickness: 1.6 to 4.0 mm

NSA-TX151B/S

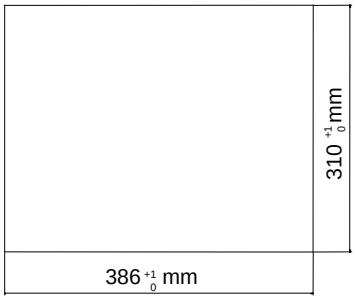

NSA-TY171B/S

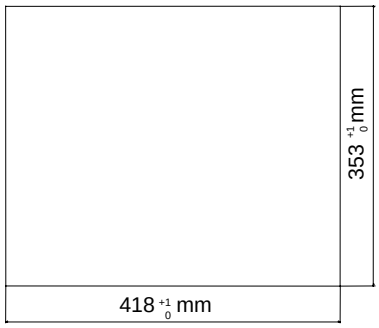

2. Insert the NSA-series Touch Panel into the hole from the front of the panel.

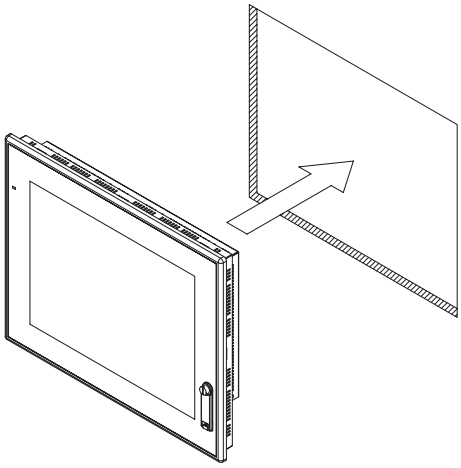

3. Use the Mounting Brackets provided to secure the NSA-series Touch Panel in the panel. Tighten the Mounting Brackets evenly to the specified torque. Failure to do so may cause the front sheet to buckle.
   Tightening torque: 0.5 to 0.6 N·m

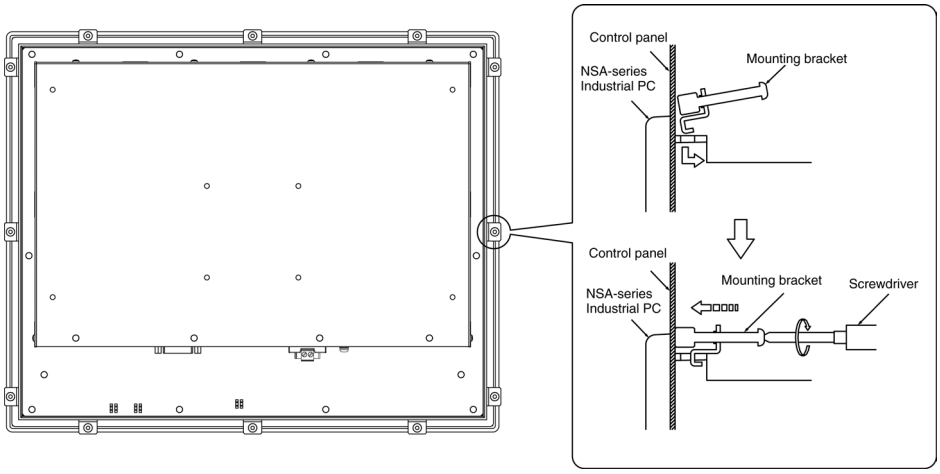

Note
- Use the NSA-series CPU Box mounted to a panel with sufficient mounting strength.

- The panel for mounting the NSA-series Touch Panel must be between 1.6 and 4.0 mm thick.
- Evenly tighten the mounting brackets for the NSA-series Touch Panel (NSA-TX□□□/TY□□□) to a torque of between 0.5 and 0.6 N·m to maintain water and dust resistance. If the mounting brackets are not tightened to the specified torque, or if they are tightened unevenly, the front sheet may become warped. In addition, make sure that the panel is not dirty or warped and that it is strong enough to hold the Modules.

3-3-3 Connecting the Power Supply

Connect a 24 V DC power supply to the power terminals on the NSA-series Box-type Industrial PC.

Note

- Do not connect an AC power supply to the power terminals.
- Do not perform a dielectric voltage test.
- Use a DC power supply with minimal fluctuation range
- Use an isolating source. Be sure to connect a DC power supply with reinforced insulation to the NSA-series Box-type Industrial PC. The DC output side power supply should not be grounded on one end.

■ Power Supply

The following specifications are requirements for power supplies that can be connected to the NSA-series Box-type Industrial PC. Select a power supply that satisfies the capacity requirement.

Item	Value
Supply voltage	24 V DC
Allowable power supply voltage range	20.4 to 27.6 V DC (24 V DC±15%)
Power supply capacity	NSA-series CPU Box (NSA-CPU□□): 60 W min. NSA-series Touch Panel (NSA-TX151B/S): 40 W min. NSA-series Touch Panel (NSA-TY171B/S): 55 W min.

NSA-series CPU Box (NSA-CPU□□)

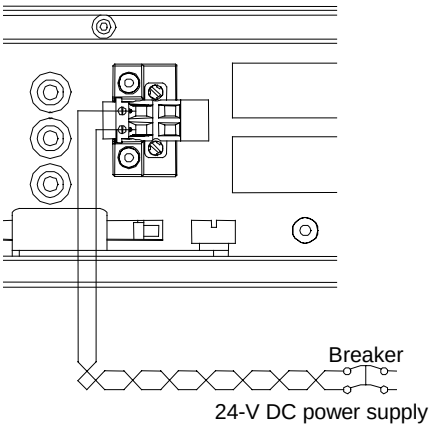

NSA-series Touch Panel (NSA-TX□□□/TY□□□)

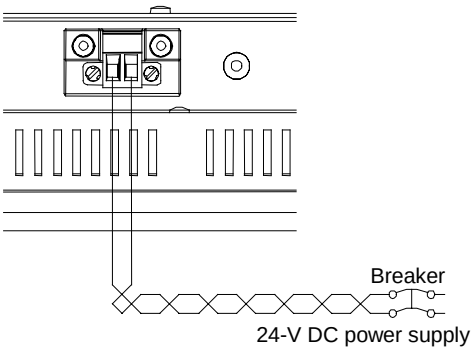

The power supply can be connected as shown below when the NSA-series CPU Box and the NSA-series Touch Panel are stacked. The power line between the NSA-series CPU Box and the NSA-series Touch Panel must be no more than 150 mm.

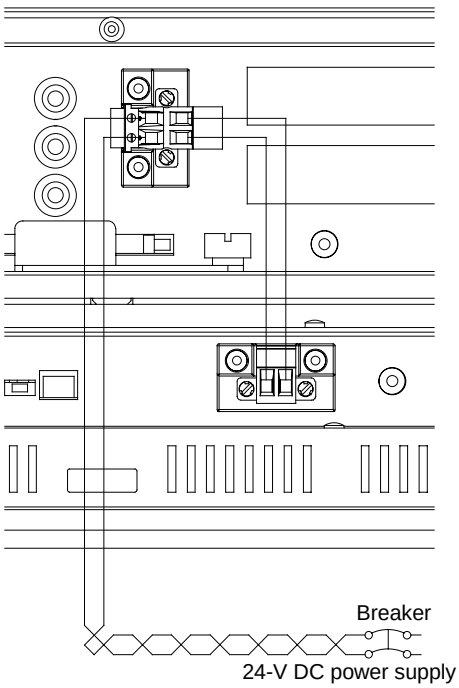

■ Connecting Parts

Note Connect to the power supply terminal block using a twisted-pair cable with stranded copper wire between AWG16 and AWG12, with a rated temperature of 75°C. Tighten the terminal screws to a torque of 0.5 to 0.6 N·m (or 5 to 7 lb·in). Be sure the screws are properly tightened.

Prepare the connection wires as shown in the figure below. Make sure the bare wires are twisted tightly together.

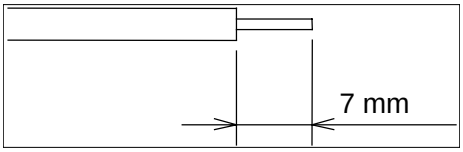

3-3-4 Connecting the Grounding Wire

The NSA-series CPU Box and NSA-series Touch Panel each have a functional ground terminal (⏚). Make sure the terminals are properly grounded to prevent malfunctioning due to electrical noise.

■ NSA-series CPU Box (NSA-CPU□□)

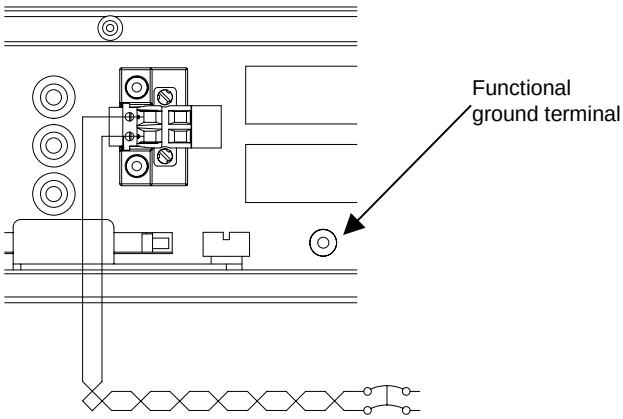

■ NSA-series Touch Panel (NSA-TX□□□/TY□□□)

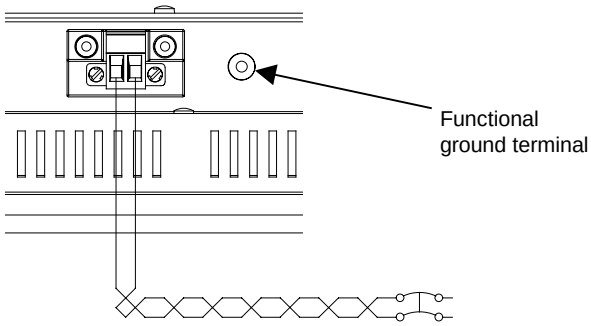

Attach a crimp terminal for an M4 screw to the grounding wire.

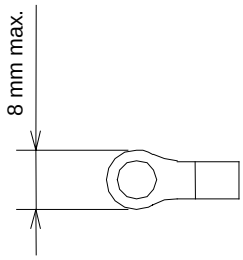

Note

- Do not install the NSA-series Box-type Industrial PC in the same panel as a noise-generating device like a motor or inverter.
- Make sure the NSA-series Box-type Industrial PC is properly grounded to prevent the Unit from malfunctioning due to electrical noise.
- When using the NSA-series CPU Box and the NSA-series Touch Panel staked, ground only the NSA-series CPU Box.

3-4 Connecting the NSA-series CPU Box and the NSA-series Touch Panel

Use a DVI and USB Cable to connect the NSA-series CPU Box and the NSA-series Touch Panel. Connect the USB cable from the type-A connector on the NSA-series CPU Box to the type-B connector on the NSA-series Touch Panel. Any port on the NSA-series CPU Box can be used for the connection.

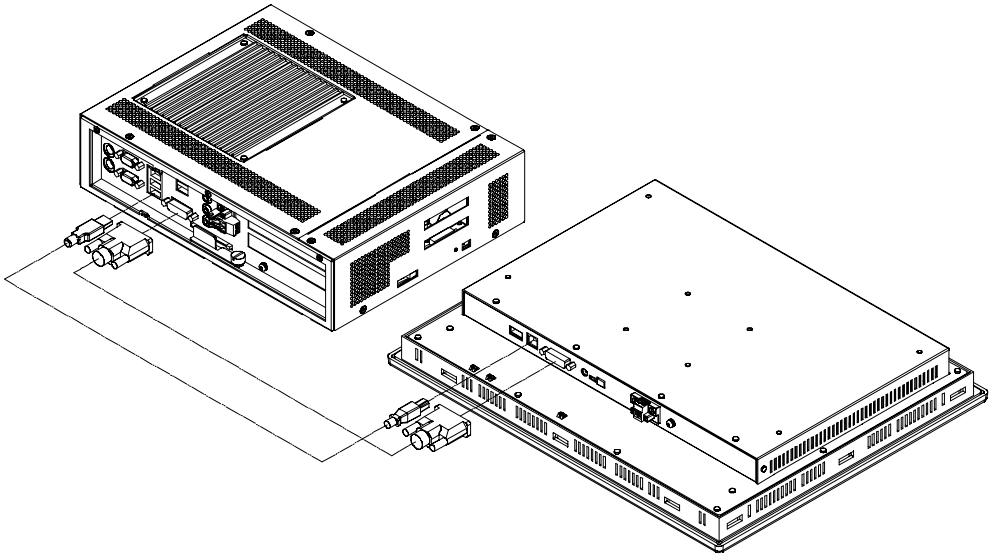

■ Mounting the NSA-series CPU Box to the NSA-series Touch Panel (When Stacking the Modules)

First attach the two mounting brackets (provided) to the NSA-series CPU Box with the four M3 screws that are provided, and then mount the NSA-series CPU Box to the NSA-series Touch Panel with the four M4 screws that are provided.

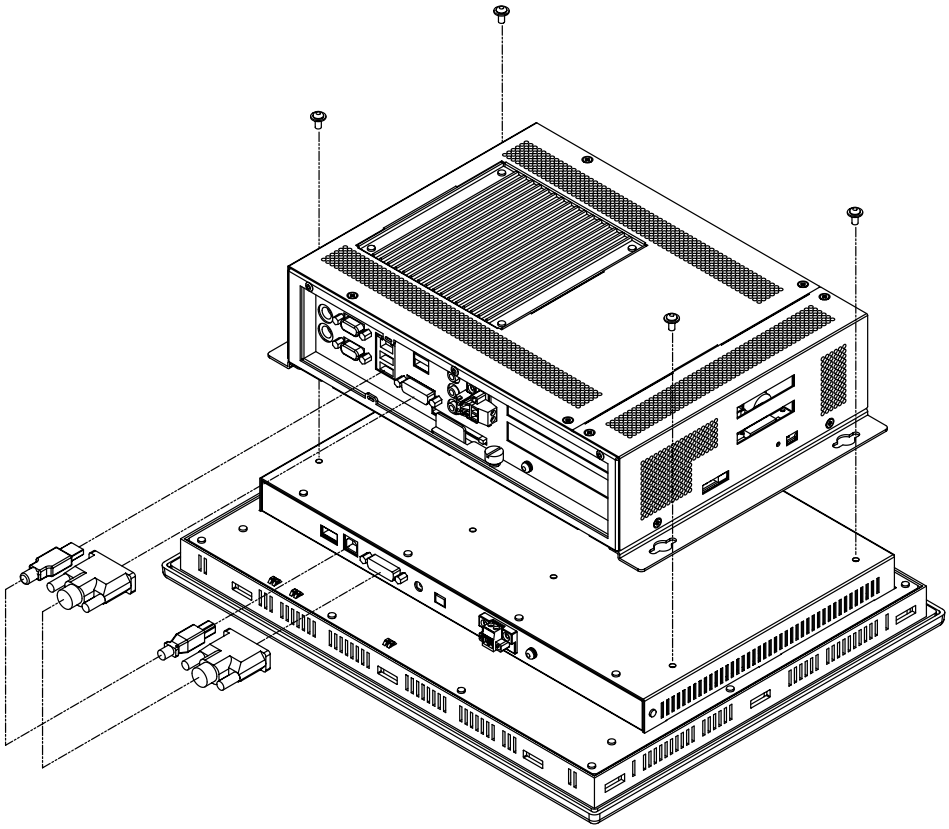

■ Connecting Cable

Use one of the following DVI and USB cables to connect the NSA-series CPU Box and NSA-series Touch Panel. These Cables are sold separately.

Model	Cable length		Remarks
	DVI	USB	
NSA-DU02	0.1 m	0.1 m	For stacked connection
NSA-DU22	2 m	2 m	---
NSA-DU52	5 m	5 m	---

3-5 Starting the NSA-series Box-type Industrial PC and Procedure after Power Interruption

Make sure that the power supply connected to the NSA-series CPU Box and NSA-series Touch Panel satisfies the following specifications for NSA-series Box-type Industrial PC startup and power interruption.

3-5-1 Operation

■ NSA-series CPU Box (NSA-CPU□□)

- **Starting the Operating System**
  If the external 24-VDC input voltage is turned OFF, the NSA-series CPU Box operating system will start up when the rated input voltage is supplied to the NSA-series CPU Box. The input voltage must remain OFF for at least 10 s before it is turned back ON. (OFF/ON interval: 10 s min.)
- **Shutting Down the Operating System**
  The NSA-series CPU Box shuts down the operating system when it receives a shutdown request from a software application, or when the user executes a shutdown operation. When the shutdown is completed, the NSA-series CPU Box will turn OFF all DC outputs except the 5-VS auxiliary power supply.
- **Power Interruptions**
  If the 24-VDC input voltage from the external power supply is interrupted, all NSA-series CPU Box power supplies, including the 5-VS auxiliary power supply, will turn OFF. If this occurs during any operation, including shutdown, that operation may not be successfully completed. Be sure to turn OFF the external 24-VDC input voltage after the shut down is completed. The NSA-series CPU Box does not have UPS or other recovery functions for power outages or power interruptions. These functions will have to be provided externally (on the system side).

■ NSA-series Touch Panel (NSA-TX□□□/TY□□□)

- **Starting**
  The NSA-series Touch Panel will start up when the rated input voltage is turn ON to the NSA-series Touch Panel when the external 24-VDC input voltage is OFF. The input voltage must remain OFF for at least 10 s before it is turned back ON. (OFF/ON interval: 10 s min.)
- **Power Interruptions**
  If the 24-VDC input voltage from the external power supply is interrupted, the NSA-series Touch Panel power supply will turn OFF.

3-5-2 Operating Sequence for the External Power Supply

The following diagram shows the power supply control sequence under normal NSA-series CPU Box operating conditions.

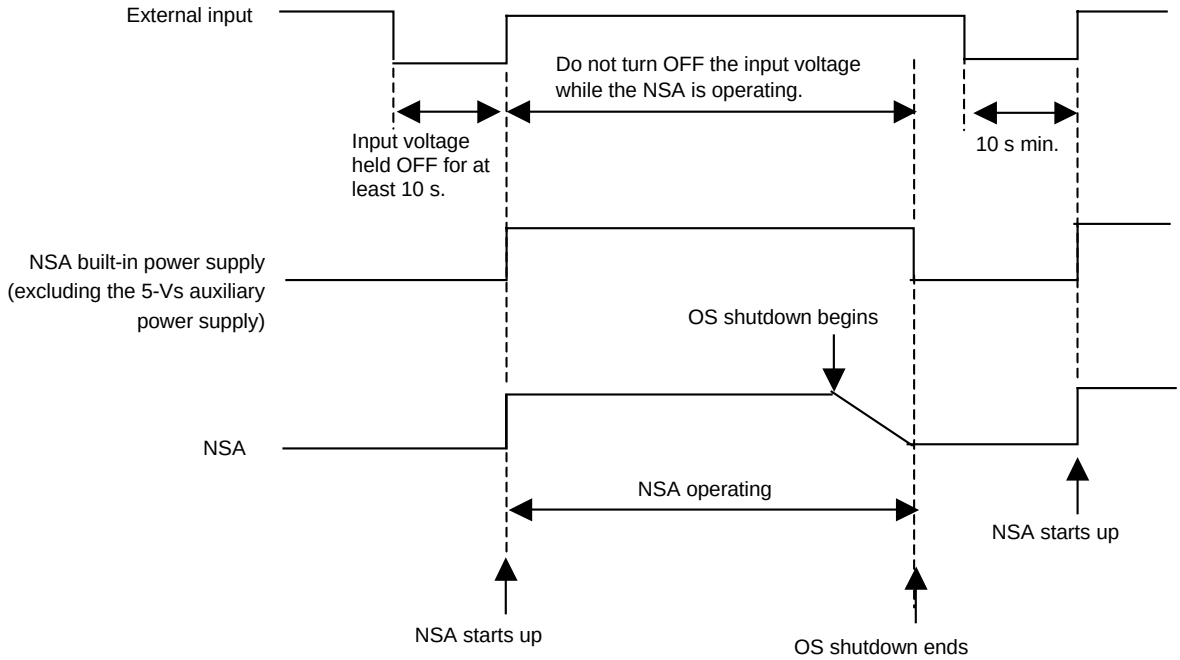

Note

- If the external input voltage is interrupted, it must remain OFF for at least 10 s before it is turned back ON. (OFF/ON interval: 10 s min.)
- If the external input voltage is interrupted during any operation, including shutdown, that operation of the NSA-series CPU Box may not be successfully completed. Be sure to turn OFF the external 24-VDC input voltage after the shut down is completed. The NSA-series CPU Box does not have UPS or other recovery functions for power outages or power interruptions. These functions will have to be provided externally (on the system side).
- Make sure that the power supplies connected to the NSA-series CPU Box and the NSA-series Touch Panel satisfy the following specifications for NSA-series Box-type Industrial PC startup and power outages.
- The entire system may shut down depending on how the power is turned ON or OFF. Follow the correct procedure for turning the power ON and OFF.

3-5-3 Installing the Memory Card

Use the following procedure to mount the Memory Card to the connector on the NSA-series CPU Box.

1. Loosen the thumbscrew on the Memory Card cover, rotate the cover up to the Install/Remove position, and secure the cover in place.
2. Push the Memory Card in firmly as far as it will go. The Eject Button will pop out when the Memory Card is secured in place.
3. Loosen the thumbscrew on the memory card cover, rotate the cover down to the Installed position, and secure the cover in place.

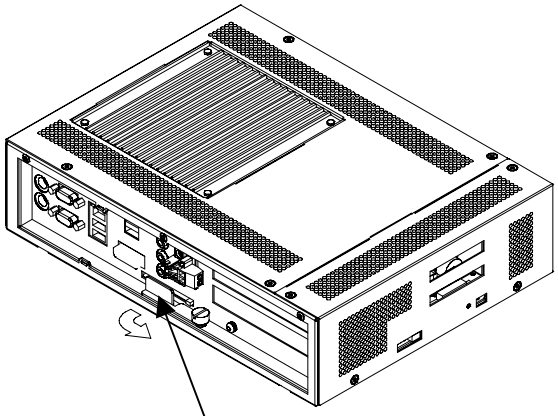

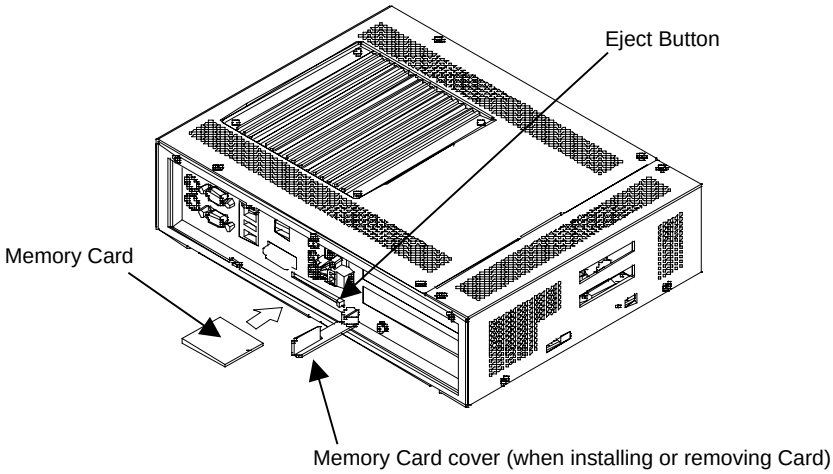

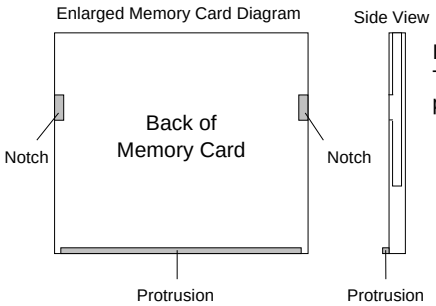

Insert the Memory Card with the backside facing up. The backside is the side with the notches and protrusion.

3-5-4 Removal Procedure

1. Loosen the thumbscrew on the Memory Card cover, rotate the cover up to the Install/Remove position, and secure the cover in place.
2. Press the Eject Button. Use your middle finger to press the Eject Button and place your index finger in front of the Memory Card to keep it from popping out and falling on the floor.

Note

- Use only a CF Card that has the CE Marking.
- Thoroughly test the memory card that will be used to confirm that it operates properly before actually using it with the product. Some memory cards may not be compatible. Also, use a memory card with an ambient operating temperature range between –5 and 85°C.

3-5-5 Front USB Port

Use the following procedure to use the front USB port on the NSA-series Touch Panel.

1. Loosen the thumbscrew to open the front USB cover.

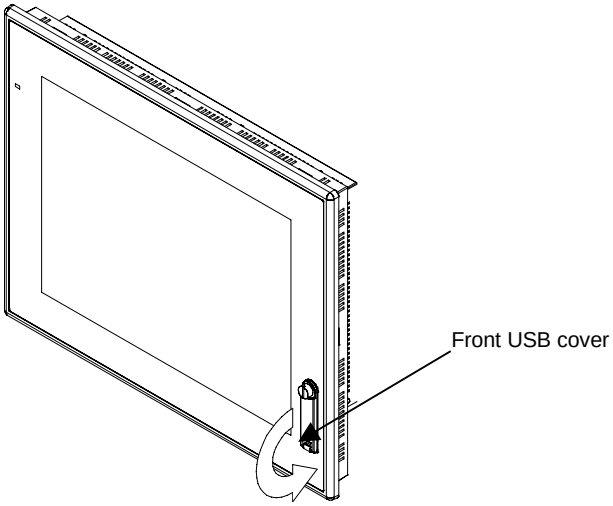

2. Connect to the USB connector.

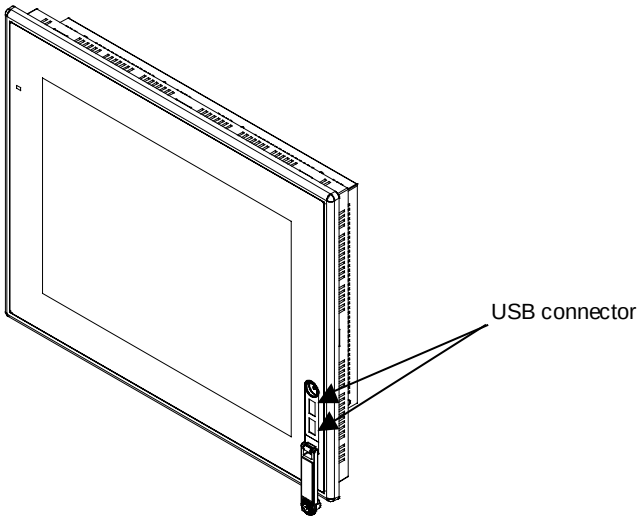

3-6 Adjusting the Touch Panel and Display

3-6-1 Calibrating the NSA-series Box-type Industrial PC Touch Panel

The Controller of the touch panel is different for the NSA-series Box-type Industrial PC (NSA-CPU□□, NSA-TX□□□/TY□□□) and the NSA-series Panel-type Industrial PC, so the touch panels are detected as different devices. In order for the touch panel to be calibrated correctly, the appropriate device must be selected.
Use the following procedure.

1. Calibrate the touch panel whenever it deviates markedly from its coordinate. Connect a PS/2 keyboard and mouse or a USB keyboard and mouse to the NSA-series Box-type Industrial PC before calibrating the touch panel. Make sure the keyboard and mouse are properly connected.

Note Shut down the NSA-series Box-type Industrial PC operating system and turn OFF the NSA-series Box-type Industrial PC before you connect the PS/2 keyboard and mouse.

2. Start up the NSA-series Box-type Industrial PC and select ***Start – Programs – UPDD – Settings*** from the bottom left corner of the screen to launch the settings program.

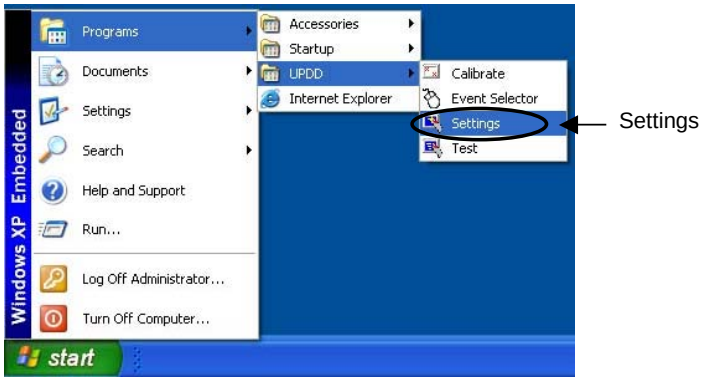

3. A Pointer Device Properties Dialog Box will be displayed. Click the **Devices** Tab in the dialog box and then check the device number displayed for the Controller named *DMC, TSC-10Series, USB*.
   Note: This is shown in black characters.

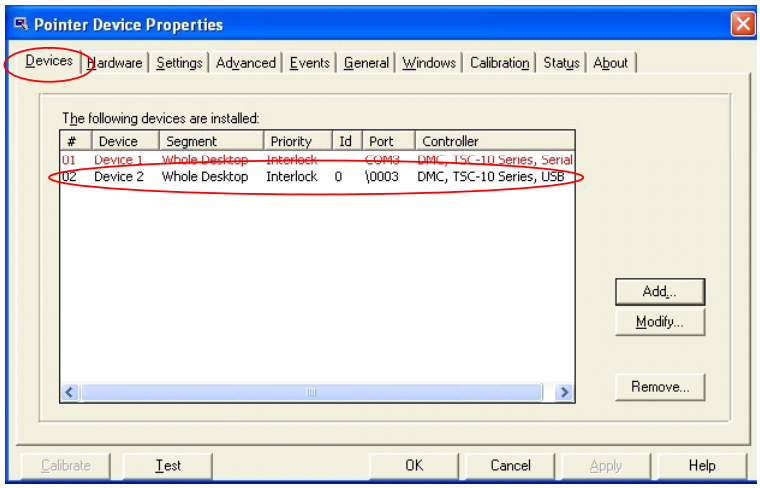

4. Click the **Calibration** Tab in the Pointer Device Properties Window, and change the device number in *Calibration Settings For* Field to the device number from step 3, above. Then click the **Calibrate** Button.

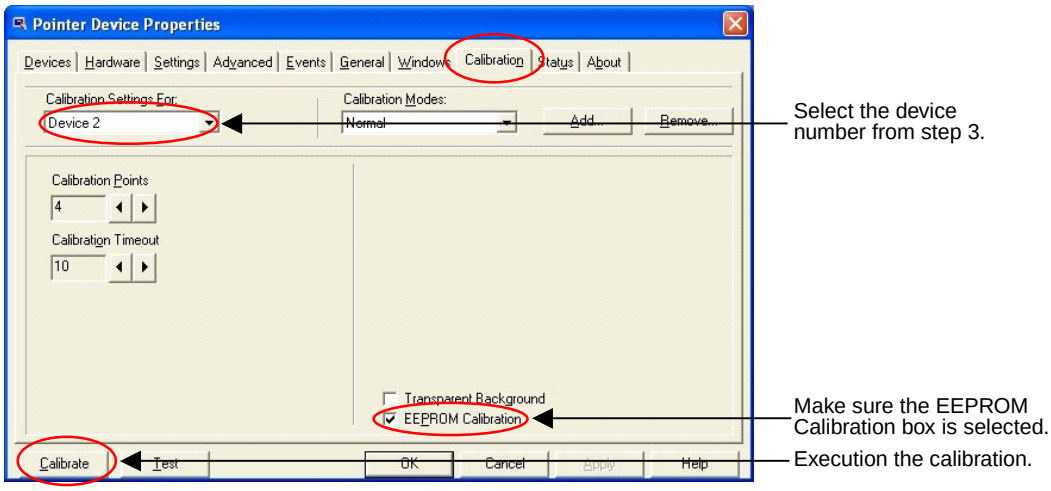

5. The calibration display will appear. Touch the tip of the arrow on the touch panel screen. When that calibration point is entered, an arrow will appear in another location. Touch the tip of the each arrow that appears.

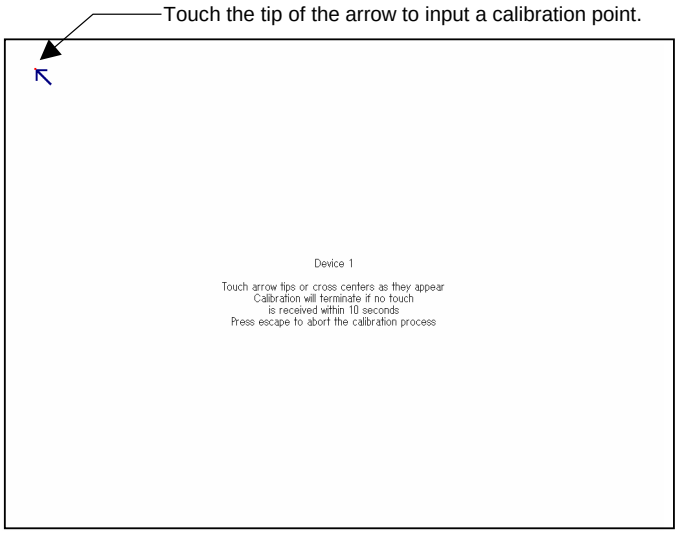

6. After all the calibration points have been entered, the **Check calibration** dialog box will appear. A message will be displayed prompting you to save the calibration data. If there were no problems with the calibration points, press the **OK** Button or the **Enter** Key on the keyboard. If there was a problem with a calibration point, do not touch anything for 10 seconds. The calibration data will be discarded and will not be saved.

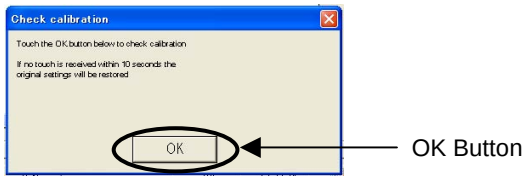

Note The touch panel may deviate from its coordinates over time. We recommend that you re-calibrate the touch panel whenever that occurs.

Note The calibration data is stored on the EEPROM in the NSA-series Box-type Industrial PC. If the EEPROM calibration box is not checked, the calibration data will be stored in Windows.

3-6-2 Adjusting the Brightness

The brightness can be adjusted for the NSA-series Touch Panel using the rotary switch or an external variable resistor (10 kΩ).

■ Using the Rotary Switch

The brightness adjustment rotary switch can be used when an external variable resistor is not connected. Use a small flat-blade screwdriver to set the rotary switch.

Brightness Setting

Switch No.	0 ⇔ 9
Brightness	Min. ⇔ Max.

■ Using External Control Resistance

When a variable resistor of 10 kΩ is connected to the external brightness adjustment connector of the NSA-series Touch Panel, the brightness can be adjusted using the external variable resistor. In comparison to adjustment by rotary switch, the brightness can be set to a darker setting using the external adjustment.

- **Equivalent Input Circuit**

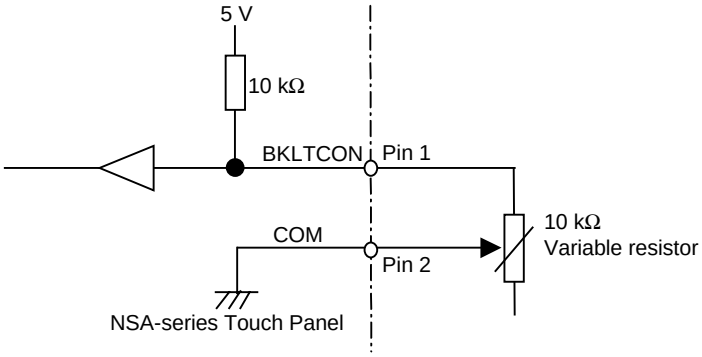

Note: The rotary switch setting is valid when the external control resistance exceeds approximately 12.5 kΩ.

Brightness Setting

External variable resistor	0 Ω ⇔ 10 kΩ
Brightness	Min. ⇔ Max.
Contrast	Min. ⇔ Max.

Section 4

RAS Functions

4-1 RAS Function Details

NSA-series Box-type Industrial PCs are equipped with standard PC RAS functions and other unique RAS functions that can be used to construct highly reliable systems.

4-1-1 What Is the RAS Solution for NSA-series CPU Box (NSA-CPU□□)?

RAS functions have important roles in various business scenes using industrial PCs, where high PC reliability of is required, as well as advanced features and high performance. The OMRON RAS Solution is a comprehensive capability to constantly monitor the system status and send information on any detected error to users and the system. RAS functions can shut down and/or enable the system to recover safely.

An NSA-series CPU Box embedded with a specific RAS Board can greatly enhance reliability through a RAS system that combines RAS Middleware and a RAS Utility. The RAS system in an NSA-series CPU Box provides mainly the following functions:

- A Monitoring Function is provided to constantly monitor the hardware and software of the NSA-series CPU Box and to provide the user failure notification when an error is detected or a failure occurs.
- An Auto-recovery Function forcefully shuts down the system when a failure occurs to prevent further faults and reboot the system for recovery.
- A Logging Function saves events in operating the NSA-series CPU Box (such as power supply ON/OFF events, OS startup/shutdown events, etc.), system status when a failure occurs, and conditions of the motherboard (i.e., the temperature and power supply) in RAS Board memory backed up by a battery.
- The Log Analysis Function analyzes the cause and/or tendency of failures using large amounts of log data saved in memory.

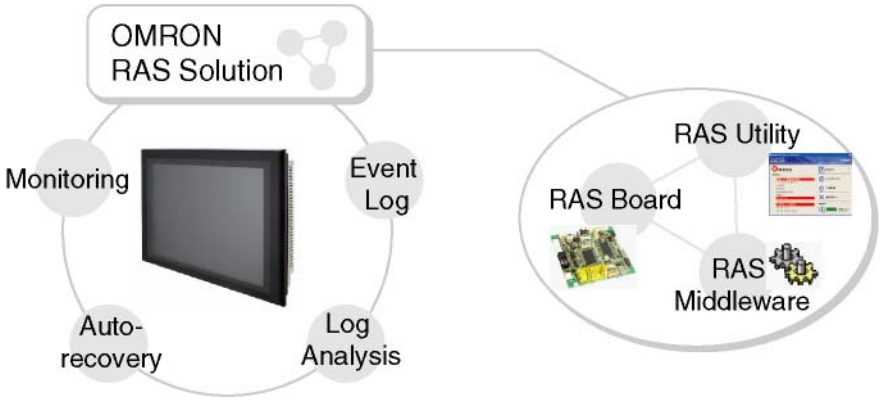

4-1-2 Monitoring and Auto-recovery

Monitoring Functions

The RAS functions enable users to monitor operation status and detect failures. The NSA-series CPU Box provides the following monitoring functions.

- **Startup Monitoring:** Provides notification of failures that occur while starting (i.e., from turning ON the power supply until startup has been completed).
- **Alive Monitoring:** Provides notification of failures that occur while the OS is running (i.e., from startup to shutdown).
- **Shutdown Monitoring:** Provides notification of failures that occur while shutting down or rebooting.
- **External Power Supply Undervoltage/Interruption Monitoring:** Detects abnormal power interruptions for the external power supply.
- **Temperature Monitoring:** Detects abnormal temperatures in the Motherboard.
- **Voltage Monitoring:** Detects abnormal power supply voltages in the Motherboard.
- **Cumulative Operating Time Monitoring:** Detects excessive cumulative operating time.
- **RAS Board Monitoring:** Detects errors in the RAS Board.

Action on Error (Forced Shutdown/Forced Reboot)

This function can enable systems to recover to improve the operation rate or terminate the system to prevent further faults after detecting a failure.
The NSA-series CPU Box with RAS functions has the following capabilities:

- Rebooting the system automatically when the operating system freezes,
- Starting the system and restoring operation automatically after the Motherboard stops because of a failure, such as overheating due to runaway operation,
- Repeating reboot attempts automatically until the system is successfully activated, if the system hangs up at startup, and
- Forcefully terminating the system automatically when the system takes too much time to shut down.

Failure Notification

The Failure Notification function reports a failure when the failure occurs or after the system recovers from the error. It notifies the user of a failure with a pop-up message that allows the user to immediately identify the situation without fail. The NSA-series CPU Box provides notification of the following.

- The user is notified of power failure that causes shutdown of the system.
- When the system goes down due to some failure, this function notifies the user of the nature of the failure and the status of the Industrial PC after the system recovers from the error.
- The user is immediately notified of any abnormal temperature or voltage in the Motherboard.

Status Monitor

The operating status of the NSA-series CPU Box can be monitored from the RAS Utility. The following RAS information can be monitored:

- Motherboard temperatures (CPU temperature and chipset temperature),
- Motherboard voltages (2.5 V, Vccp, VTR, 5 V, 12 V, HVCC, 1.5 V, and 1.8 V values),
- Cumulative operating times (motherboard and RAS Board),
- RAS system settings,
- RAS Board operating status,
- Number of errors that have occurred, and
- Failure status.

4-1-3 Logging Function and Log Analysis Function

The system keeps a log of operational events as well as of the status of the NSA-series CPU Box (temperature, voltage, etc.) in memory. The logs are saved in the RAS Board memory even if the NSA-series CPU Box cannot start due to a failure, so the user can analyze the log based on the information stored in the RAS memory in order to identify the cause of the failure. The RAS Utility includes Filter and Find functions to analyze logs. These functions allow the user to analyze the logs more effectively by specifying events in a particular period or classifying events in categories.

The RAS Utility allows the user to import/export log files. The user may export log files to save logs to a file on a regular basis. The user may also import log files to compare and analyze past logs with logs currently in the memory or to conduct log analysis on another NSA-series CPU Box.

4-1-4 Architecture

An NSA-series CPU Box's RAS system functions are achieved with the RAS Board, RAS Middleware (RAS Service), and RAS Utility.

RAS Board: This is expansion hardware used to monitor failures that occur in the software/hardware of the NSA-series CPU Box. The RAS Board can restart the system to recover normal operation when it detects a failure. Additionally, it saves power supply ON/OFF status, OS startup/shutdown status, and logs of various failures in the memory backed-up by a battery. This enables the user to analyze the conditions when failures occur and identify trends.

RAS Middleware: This software operates as part of Windows services. It communicates with the RAS Board to allow the detection of failures in the operating system. It also serves as an interface between the RAS Utility and RAS Board.

RAS Utility: This is a resident application that is automatically activated when Windows starts. When the RAS Utility detects a failure in the RAS Board, it provides notification of the failure through a pop-up message that immediately identifies the failure situation. The RAS Utility also provides functions to analyze logs that are saved in the RAS Board memory, allowing efficient analysis of the conditions when failures occur and trends. Additionally, the RAS Utility allows the NSA-series CPU Box's RAS functions to be set flexibly, including the RAS Board settings.

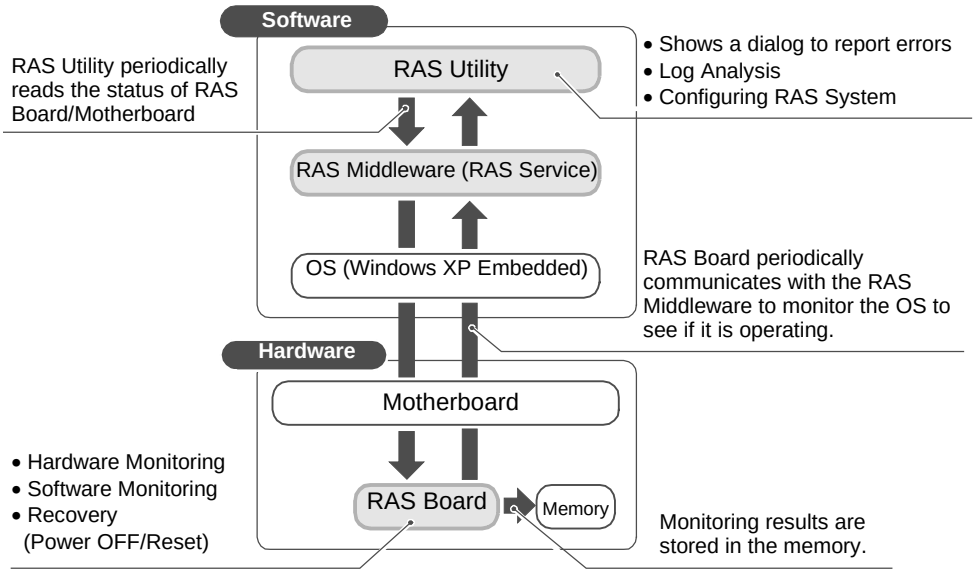
Software
RAS Utility
RAS Middleware (RAS Service)
OS (Windows XP Embedded)
Hardware
Motherboard
RAS Board
Memory
RAS Utility periodically reads the status of RAS Board/Motherboard
• Shows a dialog to report errors
• Log Analysis
• Configuring RAS System
RAS Board periodically communicates with the RAS Middleware to monitor the OS to see if it is operating.
• Hardware Monitoring
• Software Monitoring
• Recovery
(Power OFF/Reset)
Monitoring results are stored in the memory.

4-2 Special RAS Board Functions

The following RAS functions are available when an NSA-series CPU Box RAS Board is installed.

4-2-1 Special RAS Board Functions

Function	Description
Alive monitoring	Provides notification of failures that occur while the OS is running (i.e., from startup to shutdown). The RAS Board periodically communicates with the RAS Middleware on the Motherboard to monitor the OS status.
Startup monitoring	Provides notification of failures that occur while starting (i.e., from turning ON the power supply until startup has been completed). Monitors startup after the power supply is turned ON to see if startup of the NSA-series CPU Box OS is completed within the set time.
Shutdown monitoring	Provides notification of failures that occur while shutting down or rebooting. Monitors shutdown after a command to shut down the NSA-series CPU Box OS has been given to see if shutdown is completed within the set time.
Action on error (forced shutdown or forced reboot)	Recover processing will be automatically performed when there is notification of a failure. If a forced shutdown is specified, the power supply to the NSA-series CPU Box will be turned OFF. If a forced reboot is specified, the power supply to the NSA-series CPU Box will be turned OFF and then back on to reboot.
External power supply monitor	Monitors the external power supply for abnormal power interruptions.
Motherboard operating time measurement	Measures the operating time of the Motherboard.
Log function	Enables saving and reading log data.

4-2-2 Setting Procedure

The NSA-series Box-type Industrial PC DIP switch must be set to enable the special RAS Board functions.

■ Setting the DIP Switch

Set the correct DIP switch settings for the operating environment before you use the NSA-series Box-type Industrial PC for the first time. Remove the side cover to set the DIP switch. Refer to *3-2 Installing a PCI Board and Setting the DIP Switch* for details on removing the side cover.

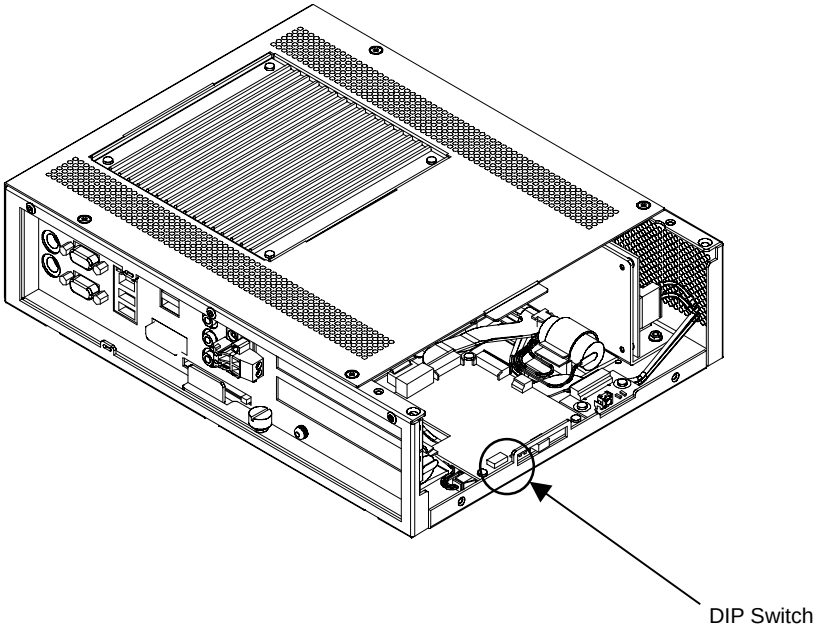

- **Setting the DIP Switch**

RAS Function Settings (Hardware Settings)

Pin No.	Function
1	Not used (Default setting: OFF)
2	Not used (Default setting: OFF)
3	Not used (Default setting: OFF)
4	Not used (Default setting: OFF)
5	Specifies the method for using the external input port (UPS power interruption signal connector). ON: Use for UPS connection. OFF: Use as general input port (default setting).
6	Specifies the ACFAIL signal input method for the external input port (UPS power interrupt signal connector). (See note.) ON: Normally supplies 24 V; Open at PWR-FAIL. OFF: Normally open; supplies 24 V at PWR-FAIL. (Recommended/default setting.)
7	Always OFF
8	Enables and disables the Action on Error operation of the special RAS Board monitoring functions (alive, startup, and shutdown monitoring). ON: Disables operation when there is an error. OFF: Enables operation when there is an error (default setting).

Note: Select the appropriate input method for the system you are using.

Note Be sure to turn OFF the NSA-series CPU Box power supply (external input power supply) prior to removing the side cover and setting the DIP switch.

4-3 Motherboard RAS Functions

The NSA-series Box-type Industrial PC can read standard PC RAS data (voltage, temperature, fan rpm). It also has additional unique RAS functions, such as POST error logging, POST error retry, and CMOS data recovery.

4-3-1 Standard PC RAS Data

The NSA-series Box-type Industrial PC can read the following standard PC RAS data.

No.	Monitored hardware data	Description
1	CPU temperature sensor	Temperature data read via the SMBus interface (hardware monitor interface). (Not converted to degrees centigrade)
2	No. of fan rotations (See note.)	Fan rpm (2 fans) and the fan log (per fan) read via the SMBus interface (hardware monitor interface). (Not converted to rotations per minute)
3	Board voltage	Voltages read via the SMBus interface (hardware monitor interface). The following voltages can be read. HVCC (3.3 V) V12 (+12 V) V5 (+5 V) VTR (3.3 V) V25 (+2.5 V) Vccp V18 (+1.8 V) V15 (+1.5 V) (Not converted to voltage)
4	POST error logs	BIOS startup log data (approximately 40 bytes for the 10 most recent errors) read from specified CMOS addresses in the chipset.

Note: The NSA-series Box-type Industrial PC does not have a fan.

Note Although the NSA-series Box-type Industrial PC will read RAS data from the super I/O chip (SMSC LPC47M192) and the chipset (Intel 855GME+Intel 6300ESB) on the motherboard, it does not do conversions, such as converting to degrees of temperature. Refer to respective datasheets for data processing (data conversion) details.

4-3-2 Unique RAS Functions

■ POST Error Log

When POST errors occur, the 4-byte POST error code, time, month, and date for up to 32 errors are logged as individual POST error records. These records can be read from the BIOS setup menu.
Error data can be retained indefinitely without relying on the internal battery for backup because POST error logs are saved in the motherboard EEPROM. This also means that error data can only be deleted from the BIOS setup menu.

Note: After 32 errors, the most recent error will overwrite the oldest error. Individual error records cannot be deleted. If you delete one error record, they will all be deleted.

■ POST Error Retry Function

- **Normal Mode**
  The message *Press the F1 Key to Resume, Press the F2 Key to Setup* will be displayed on the screen to abort the startup.

- **Retry Mode**
  The message *Press < F1> to Resume, <F2> to Setup* will be displayed on the screen for the amount of time specified at the timer setting. When that time has elapsed, the system will attempt to restart and the process will repeat up to the number of times specified in the retry counter setting. There are three options for the next operation after the specified number of retries is exceeded: startup, stop, or power OFF.

Function	Setting	Description
Retry Counter	1 to 15	Sets the number of retries.
Timer	1, 3, 5, 10, or 15	Sets the amount of time until the next retry.
Auto Resume	Enabled Disabled	Enables or disables whether to ignore the error when the number of retries is exceeded and resume startup.
Power Off	Enabled Disabled	Enables or disables power OFF when Auto Resume is disabled.

- **Auto Mode**
  The message *Press < F1> to Resume, <F2> to Setup* will be displayed on the screen for the amount of time specified at the timer. Any errors will be ignored and startup will resume.

Function	Setting	Operation
Timer	1, 3, 5, 10, or 15	Sets the amount of time until the next retry when an error occurs.

■ NVRAM Function

The motherboard has a chipset with a 256-byte CMOS (banks 1 and 2) and a 512-byte EEPROM (bank 3) for CMOS expansion. Banks 1 and 2 must be backed up by the internal battery and are used to store BIOS settings. Bank 3 does not have to be backed up by the internal battery and is used to store backup BIOS settings and POST error logs.

Bank	Size	Placement	Occupied Size	Application
Bank-1	128 bytes	CMOS in Chipset	128 bytes	BIOS
Bank-2	128 bytes	CMOS in Chipset	88 bytes	BIOS
			40 bytes	Reserved
Bank-3	512 bytes	EEPROM	256 bytes	CMOS backup area
			128 bytes	POST error log storage area
			128 bytes	Reserved

The EEPROM can only be initialized from the BIOS setup menu.

Function	Setting	Description
Clear EEPROM	Press Enter	Press the **Enter** Key to delete all data from the EEPROM (0 clear).

Note: Use with caution because initializing will also clear POST error log data.

■ CMOS Data Recovery Function

BIOS can save BIOS settings to the CMOS and can restore those settings from the CMOS.

Function	Setting	Description
Backup CMOS	Press Enter	Press the **Enter** Key to save the current BIOS settings. The message *In progress, please wait* will be displayed while the settings are being saved.
Restore CMOS	Press Enter	Press the **Enter** Key to restore the last saved BIOS settings. The message *In progress, please wait* will be displayed while the settings are being restored.

Note: Clock data cannot be saved or restored.

4-3-3 Setting Procedure

■ BIOS Settings

The POST error retry, NVRAM, and CMOS data recovery functions can be set from the BIOS setting screen.

4-4 RAS Utility Functions

The RAS Utility software helps the user make the most of all of the RAS functions. The RAS Utility is a resident application that is started automatically, and has the following RAS functions.

4-4-1 RAS Utility Functions

Item	Function
Failure Notification	The Failure Notification function reports a failure when the failure occurs or after system recovery. It notifies the user of a failure with a pop-up message.
Status Monitor	This function lists the NSA-series CPU Box hardware and software status, which is read periodically.
Log Analysis	The causes of failures and failure trends can be analyzed efficiently based on the log data stored in the RAS Board.
RAS Settings	This function can be used to set the NSA-series CPU Box RAS settings, including the RAS Board's settings.

4-4-2 Setting the Failure Notification Function

The following procedure enables the Failure Notification Function.

1. The following window will be displayed just after the RAS Utility starts.
   Click the **RAS Utility** Icon in the taskbar to display the pop-up menu and select ***Open*** to open the window.

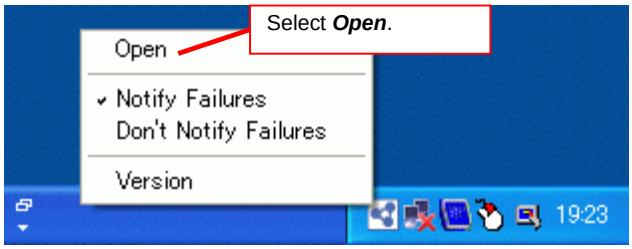

2. The following window will be displayed. Click the **ON** Button in the *Failure Notification* Area to enable the Failure Notification Function.

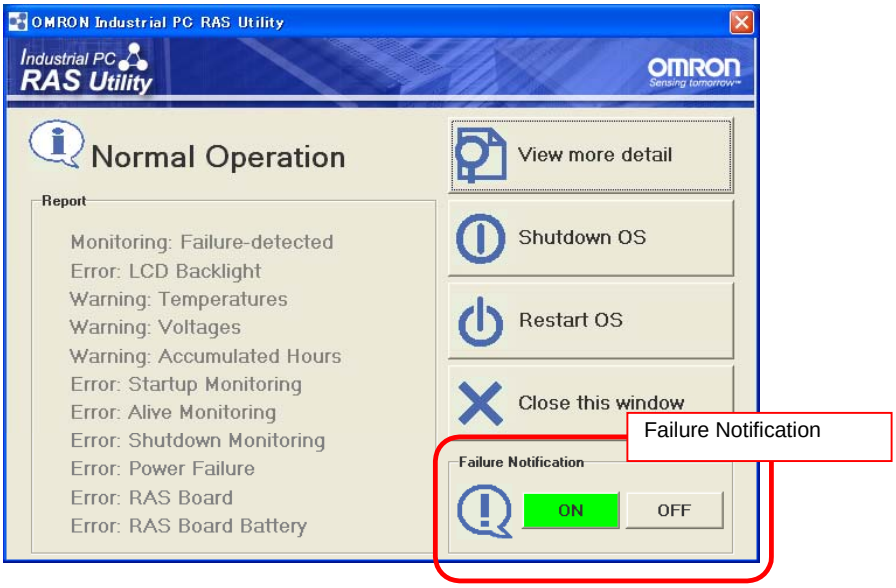

The icon shows the status of the Failure Notification Function.

11:40	Failure Notification is enabled.
11:41	Failure Notification is disabled.

3. When Failure Notification is enabled, the following pop-up window will be displayed if a failure occurs. The window will display details on the current failure.

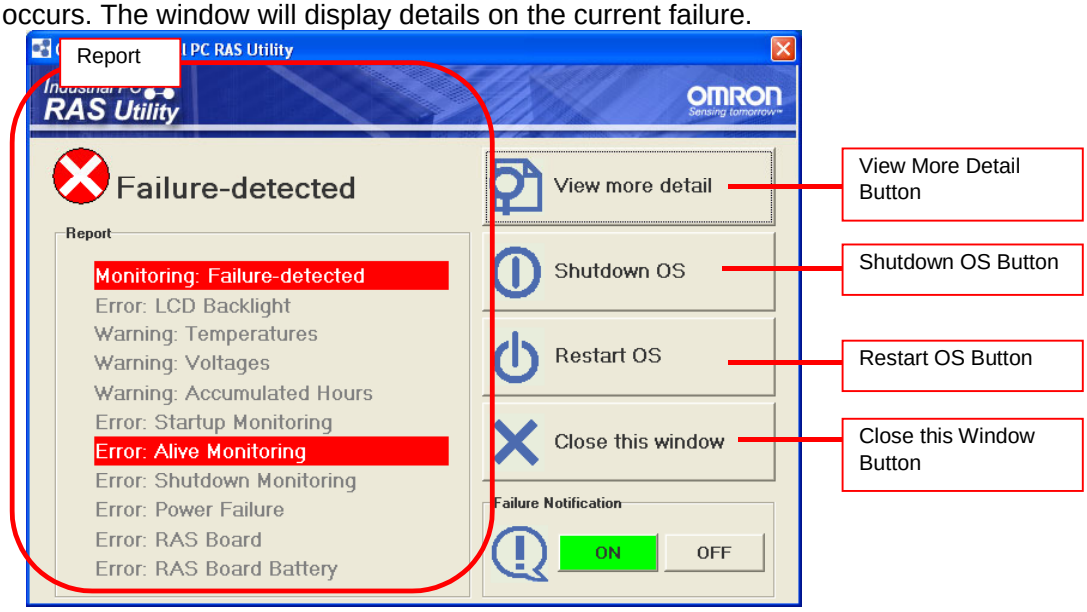

Note: For details on using this window, refer to the RAS Utility's Help function.

■ Clearing Failure-detected Status

If the NSA is started when a failure is detected, the failure notification function will operate, and the Failure-detected Notification Dialog Box will be displayed. The failure-detected status must be cleared so that the Failure-detected Notification Window is not displayed at startup.

Select **View more detail**.

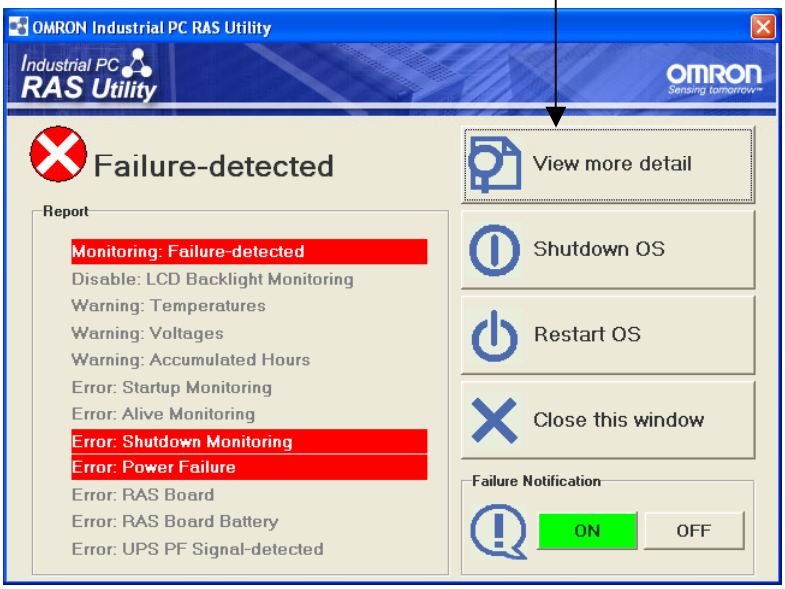

To clear the failure-detected status, select ***Action – Clear Failure-detected Mode*** from the *View more detail* Dialog Box.

Select ***Clear Failure-detected Mode*** from the Action Menu.

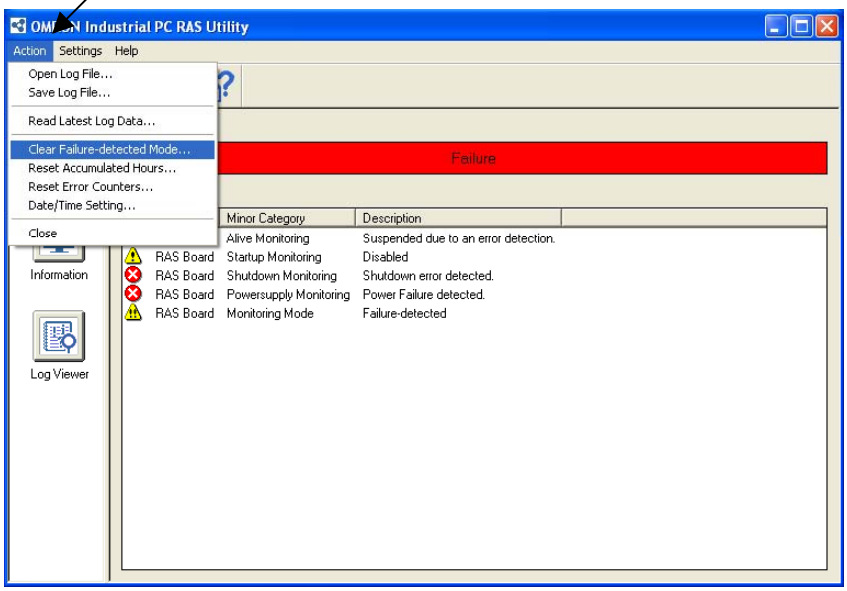

■ Changing the Settings of the Shutdown OS and Reboot OS Buttons in the RAS Utility

Refer to C:\Program Files\OMRON\tools\Button Setting\Readme.html to enable or disable these buttons.

4-4-3 Checking NSA-series CPU Box Operating Status using the Status Monitor

Detailed information can be displayed on the NSA-series CPU Box.

- **RAS Board:** This tab page shows information on the occurrence of failures and the RAS Board's operating status.

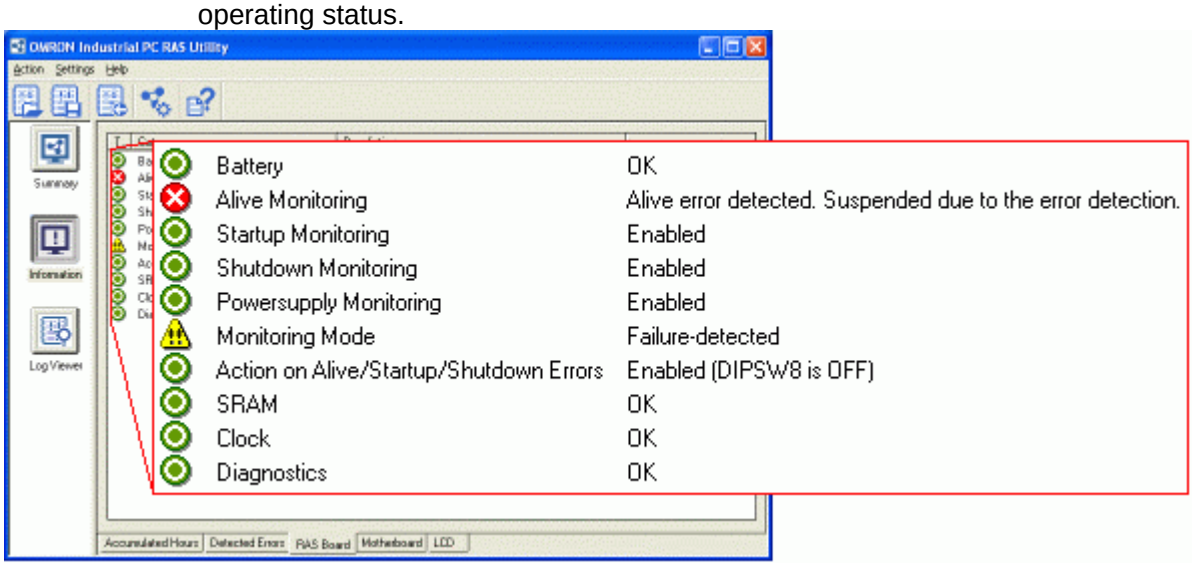

- **Motherboard:** This tab page shows the Motherboard's voltage and temperature information.

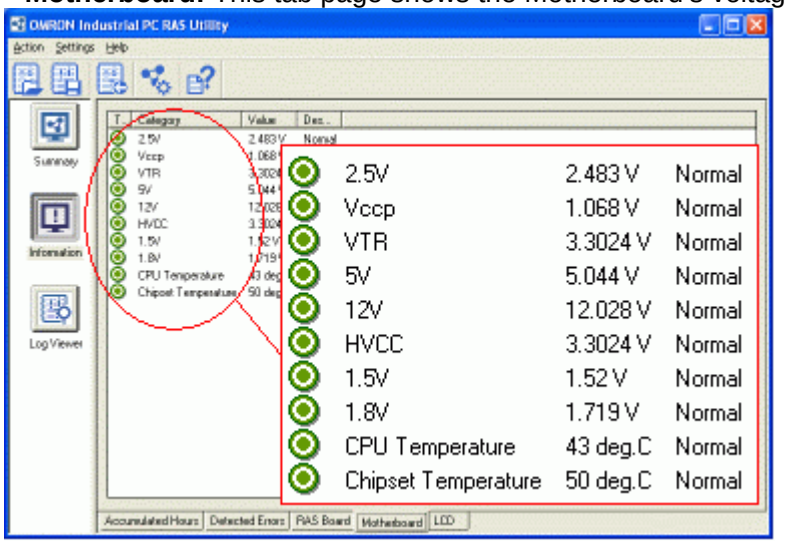

Note: For details on using this window, refer to the RAS Utility's Help function.

4-4-4 Log Viewer (Filter and Find)

The RAS Utility obtains the log from the RAS Board and Motherboard. The log data can be analyzed efficiently with the Filter and Find Functions.

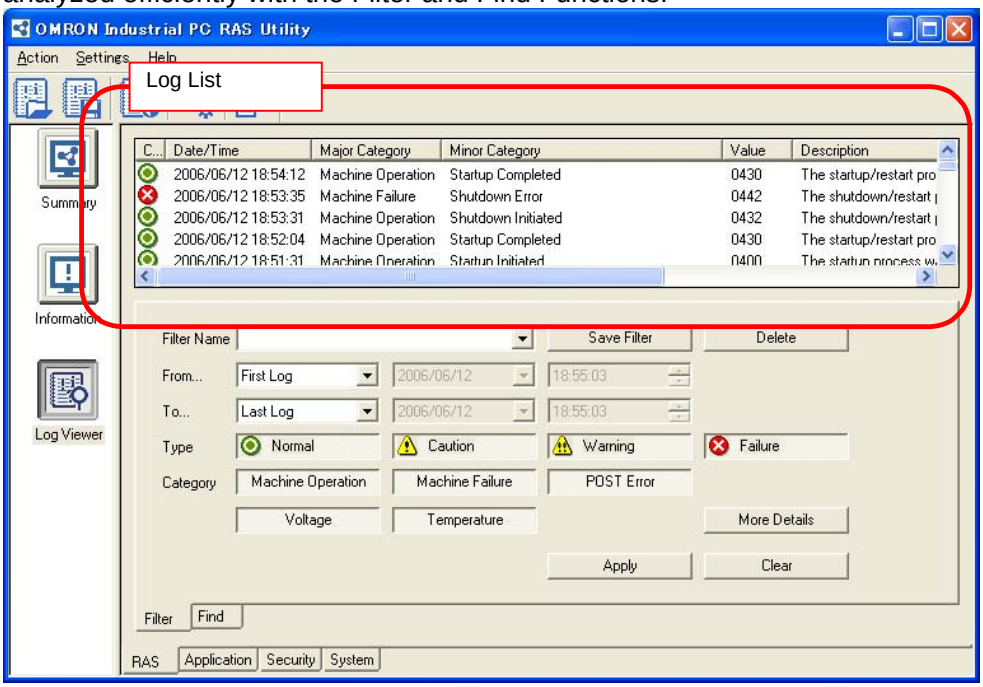

- **Filter**

Displays a list of the log data that meet the filter conditions.

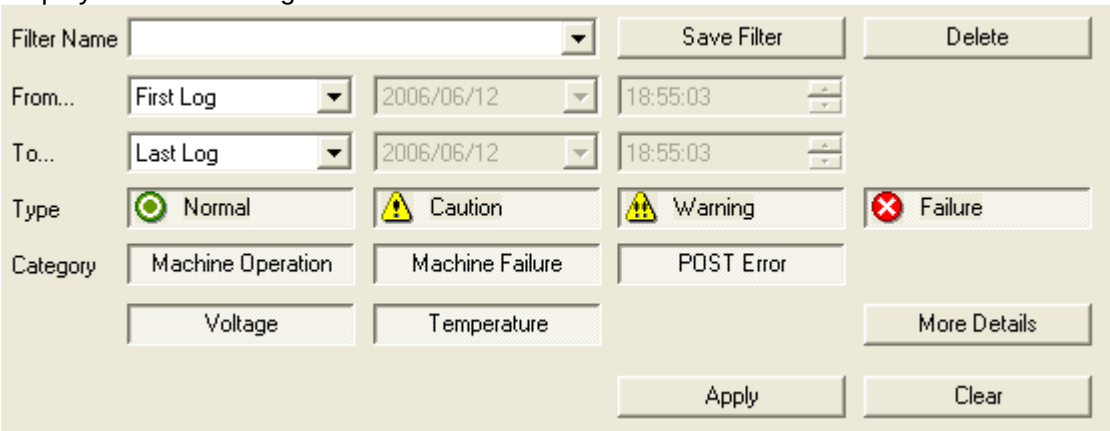

- **Find**

Focuses on the log data that meets the search conditions.

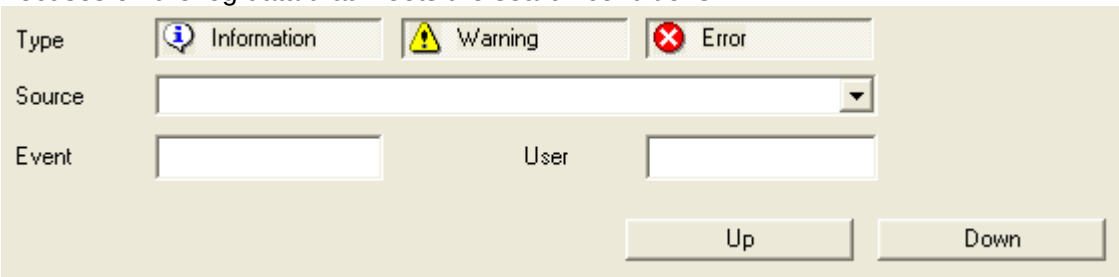

Note: For details on using this window, refer to the RAS Utility's Help function.

Note To change the log date or time if incorrect, select *Action – Date/Time Setting* from the RAS Utility Menu to make the setting.

Section 5

Maintenance

5-1 Maintenance

Perform all maintenance work stipulated here to ensure optimum performance of the NSA-series Box-type Industrial PC.

WARNING

Do not disassemble, cut, modify, or burn the product, and do not touch internal parts while the power is ON. Doing so may cause electric shock or fire.

5-1-1 Data Backup

Always back up your data and keep the backup in a safe place because the NSA-series CPU Box may have to be sent out for repairs or replaced if a malfunction should occur.

5-1-2 Spare Units

It is recommended that you always keep spare Units on hand to get your system up and running again as quickly as possible in case a malfunction should occur in the NSA-series Box-type Industrial PC or the screen becomes unreadable upon reaching the end of the service life of the backlight.

5-1-3 Backlights

The NSA-series Touch Panel display must be replaced if the backlight brightness diminishes and the screen becomes difficult to read.

■ Guidelines for Replacing the Backlight

A period of 50,000 hours of operation at room temperature with normal humidity can be considered as a guideline for replacing the backlight.
The service life of the backlight can vary significantly with the ambient temperature. It is shortened by extremely high or low temperatures, falling off sharply under low-temperature conditions. Request replacement of the backlight when the brightness has dropped to half of the brightness when it was new.
Do not attempt to replace the Touch Panel yourself. Contact your OMRON representative to replace the Touch Panel.

5-1-4 Batteries

One lithium battery on the motherboard and another on the RAS board are used to back up the NSA-series CPU Box calendar, clock, and log data. The service life of these batteries is approximately five years in an operating environment maintained at 25°C and is shorter in environments with a higher ambient temperature. Replace the batteries periodically depending on the operating environment.
Motherboard battery: NSA-BAT01
RAS board battery: NSA-BAT01

■ Guidelines for Replacing Batteries

The guidelines for replacing lithium batteries are as follows:

- Five years have elapsed since a new battery was installed.
- The BATLOW indicator on the RAS Board is lit (the RAS Board battery only).

Note

- Dispose of any battery that has been dropped on the floor or otherwise subjected to excessive shock, as this may cause the battery fluid to leak.
- Make sure you have the correct type of battery and that you install it properly.
- Replace the battery yourself.
- Operation may not be correct if a battery other than the specified battery is used.

■ Procedure for Replacing Batteries

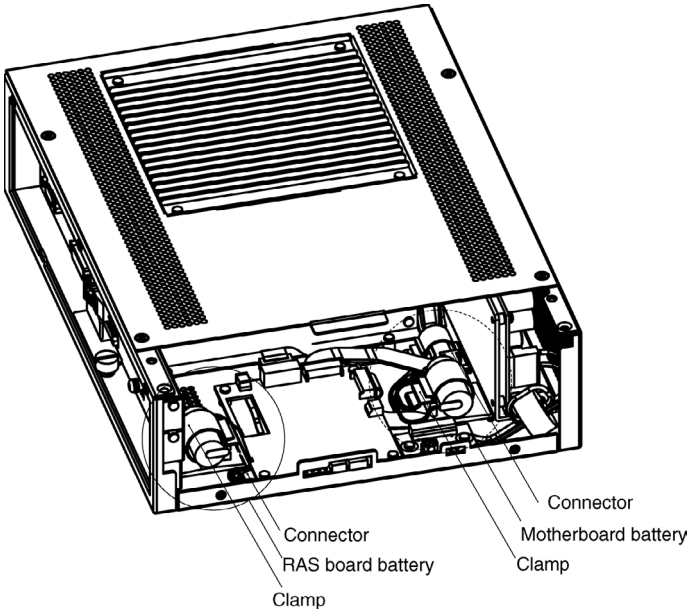

■ Changing the RAS Board Battery

1. Backup the maintenance status data held in the RAS board.
   Refer to C:\Program Files\OMRON\tools\readme.html for the backup procedure for maintenance status data on the RAS board.
2. Remove the side cover. (Refer to *3-2 Installing a PCI Board and Setting the DIP Switch.)*
3. Remove the RAS board battery from the clamps, and then unhook the connectors.
4. Replace the battery, and then assemble the unit in the reverse order.
5. Register the maintenance status data in the RAS board.
   Refer to C:\ProgramFiles\OMRON\tools\readme.html for the registration

procedure for the maintenance status data in the RAS board

Note

Maintenance status data will become corrupted when the RAS board battery is replaced. The maintenance status data on the RAS board must be backed up and then registered.

■ Replacing the Motherboard Battery

1. Remove the side cover. (Refer to *3-2 Installing a PCI Board and Setting the DIP Switch*.)
2. Remove the motherboard battery from the clamps, and then unhook the connectors.
3. Replace the battery, and then assemble the unit in the reverse order.
4. Initialize the BIOS settings, and then set the time and date.

(1) Setting up the BIOS and Starting and Exiting the BIOS Menu

The following message will be displayed at the bottom of the window when the system power supply is turned ON

- Logo Displayed

- Logo Not Displayed

Press <F2> to enter SETUP

Press the F2 Key while the message is displayed. The Setup Menu will start, and the Main Setting Screen will be displayed.

Note: The password must be entered if one has been set.

(2) Initializing BIOS Settings

Select *Exit – Load Setup Defaults* using the Arrow Key, and press the Enter Key. The BIOS settings will be initialized.

(3) Setting the Date and Time

Using the Arrow Key, select *Main – System Time* or System Date to set the time or date.

System Time	HH:MM:SS	Time setting
System Date	MM/DD/YYYY	Date setting

(4) Setting up the BIOS and Exiting the BIOS Menu

Select *Exit – Exit Saving Changes* using the Arrow Key, and press the Enter Key. The BIOS settings will be saved, and the menu will close (restart).

Note

- The BIOS will be unstable after the motherboard battery has been replaced. Be sure to initialize BIOS and redo the settings
- The system may not start (nothing will be displayed) after the motherboard battery has been replaced. If this occurs, unhook the motherboard battery connector with the device power supply OFF, and reconnect the battery after waiting 10 s.

5-2 Cleaning and Inspecting

Clean and inspect the NSA-series Box-type Industrial PC regularly to ensure optimal performance.

5-2-1 Cleaning

The display becomes difficult to read when it gets dirty. Be sure to clean it regularly as described below.

- Use a soft, dry cloth to wipe off the display every day. Do not use excessive force to clean a display that is very dirty because you may damage the front panel. Instead, moisten the cloth first to remove the dirt.
- If wiping the display with a dry cloth fails to remove the dirt, moisten the cloth with a highly diluted solution of mild detergent (2%) and then wring the cloth well before using it to wipe off the display.
- Adhering rubber, vinyl, or tape to the Unit for extended periods of time will stain the NSA-series Box-type Industrial PC. Remove these items from the Unit each time you clean it.

Note Never use chemically treated cloth or volatile solvents, such as benzene or thinner, to clean the product.

5-2-2 Inspecting

Inspect the NSA-series Box-type Industrial PC once or twice a year. Shorten the interval between inspections if the operating environment is extremely warm, moist, or dusty.

■ Inspection Items

Inspect the following items to make sure they are within acceptable levels according to the judgment criteria. If the inspection results fall outside these levels, improve the operating environment and re-tighten screws or take other measures to bring the results back within the acceptable range.

Inspection item	Inspection details	Judgement criteria	Inspection method
Supply voltage	Power terminal voltage fluctuation	Allowable voltage fluctuation range (24 VDC±15%)	Circuit tester
Ambient operating conditions	Ambient temperature in the operating panel and near the LCD display	0 to 50°C (Refer to *1-2-2*.)	Thermometer
	Ambient humidity in the operating panel and near the LCD display	10% to 85% (Refer to *1-2-2*.)	Hygrometer
	Presence of dust	No dust built up.	Visual
	Presence of oil build up	No specks of oil between the front panel and the molded plastic.	Visual
Mounting conditions	Loose Mounting Brackets	Tightened to the specified torque	Torque screwdriver

Inspection item	Inspection details	Judgement criteria	Inspection method
	Cable connector status	Connectors are fully inserted, locked in place, and show no signs of looseness.	Phillips head screwdriver
	Loose screws on external wiring	No looseness.	Flat-blade screwdriver
	External connecting cable status	No problems such as cuts or cracks.	Visual, circuit tester
Consumables	Backlight contrast	Sufficient contrast Service life at room temperature (25°C): Use 50,000 hours as a guideline.	Visual
	Batteries	5 years at room temperature (25°C)	Replace every 5 years.

Note

- Do not attempt to disassemble, repair, or modify the product in any way.
- Dispose of the product and batteries according to local ordinances as they apply. Have qualified specialists properly dispose of used batteries as industrial waste.

5-3 Troubleshooting Guide

This section describes remedies for problems that may occur during operation of the product. Refer to the following table if a problem occurs.

5-3-1 Remedies for Problems

■ CPU Box

Problem	Possible cause	Remedy
The PS/2 keyboard or PS/2 mouse is not working.	The PS/2 keyboard or PS/2 mouse was connected while the OS was operating.	Always shut down the OS and turn OFF the power supply to the product before connecting the PS/2 keyboard or PS/2 mouse.
The PCI board does not fit.	The PCI board is larger than the specified size.	Refer to *3-2 Installing a PCI Board and Setting the DIP Switch* for information on the PCI boards that can be used.
The PCI board does not operate.	The power supplied to the PCI board is insufficient.	The power that can be supplied for PCI boards is 2.1 A max. at 5 VDC and 1.0 A max. at 3.3 VDC for the two slots combined. Check the PCI board specifications.
	The PCI board is not being used in the proper ambient operating temperature range.	There are restrictions on the ambient operating temperature depending on the PCI board used. Use the PCI board in the proper ambient operating temperature range.
The power supply is not input.	The 24 VDC is not being supplied for power.	Check the power supply connection wiring. Refer to *3-3-3 Connecting the Power Supply*.
	The time between turning OFF the external input voltage and turning ON the power again is too short.	The external input voltage must be held OFF for 10 s min between the time the external input voltage is turned OFF and the time the power is turned ON again. (Wait at least 10 s before turning the power supply ON again.)
	The power supply capacity is insufficient.	Check the power supply specifications and use an appropriate power supply. Refer to *3-3-3 Connecting the Power Supply*.
The OS does not operate.	The start monitor time for the RAS board is too short.	Disable the Startup Monitoring Function of the RAS board. If it cannot be disabled, turn ON DIP switch pin 8 to disable the Action on Errors Function. Refer to *3-2 Installing a PCI Board and Setting the DIP Switch*.
	A signal selector or other device is being used with the PS/2 keyboard or PS/2 mouse.	Make the connections directly without using a signal selector.
	There is a Windows system error.	Contact an OMRON sales representative if the Windows XP Embedded OS does not operate properly.

Problem	Possible cause	Remedy
Failure notification is not given.	Failure notification is disabled.	Enable failure notification. Refer to 4-4-2 *Setting the Failure Notification Function*.
	The DIP switch is set to disable the Action on Errors Function.	Set the DIP switch to disable the Action on Errors Function and restart the device. Refer to *3-2 Installing a PCI Board and Setting the DIP Switch*.
The date or time of the RAS log does not match the date or time of the OS.	The date or time in the OS was changed.	Set the time for RAS before setting the time for the RAS Utility. Refer to *4-4-4 Log Filter (Filter and Find)*.
Insufficient memory	The memory capacity is insufficient.	Close unnecessary applications. If memory is still insufficient even after unnecessary applications have been closed, setup virtual memory. Refer to *Appendix 6 Using Virtual Memory*.

■ Touch Panel

Problem	Possible cause	Remedy
Entry on the Touch Panel is not working.	The touch panel was repeatedly pressed too quickly.	Confirm each entry before moving to the next entry.
	The CPU Box and Touch Panel are not connected using USB cable.	Connect the CPU Box and Touch Panel using the USB cable. Refer to *3-4 Connecting the NSA-series CPU Box and the NSA-series Touch Panel.*
The entry position on the Touch Panel is misaligned.	Deterioration over time caused misalignment.	Deterioration over time may cause misalignment in the coordinates compared to when the touch panel was new. If this occurs, recalibration is recommended. Refer to *3-5-1 Calibrating the Touch Panel.*
The power supply is not input.	The 24-VDC power is not being supplied.	Check the power supply connection wiring. Refer to *3-3-3 Connecting the Power Supply*.
	The time between turning OFF the external input voltage and turning ON the power again is too short.	The external input voltage must be held OFF for 10 s min between the time the external input voltage is turned OFF and the time the power is turned ON again. (Wait at least 10 s before turning the power supply ON again.)
	The power supply capacity is insufficient.	Check the power supply specifications and use an appropriate power supply. Refer to *3-3-3 Connecting the Power Supply*.

Appendix

Appendix 1 BIOS Setup

This section describes the procedure for using the BIOS setup menu of the NSA-series Box-type Industrial PC. The screens shown in this document are only examples and may differ slightly from the actual screens depending on the product.

Appendix 1-1 Using the Setup Menu

■ Starting Up and Exiting the BIOS Setup Menu

A message box like the one shown below will be displayed at the bottom of the screen when the system power supply is turned ON.

Logo Displayed:

Logo Not Displayed:
Press <F2> to enter SETUP.

1. Press the F2 Key while the message box is displayed to launch the setup menu.

2. The Main Setting Screen will be displayed.

Note: You must enter a password if one has been set.

3. Use the Down, Left, or Right Arrow Key to go to the next item and use the Enter Key to select the item.

Note: Refer to *Appendix 1-5 Main Menu* for details on individual screens.

Select the Exit Screen to exit from the setup menu.

Note: Refer to *Appendix 1-11 Exit Menu* for details on exit options.

Note The RAS Board's startup monitoring is performed even during BIOS setup. Disable the startup monitoring function when making the BIOS settings. If the startup monitoring function cannot be disabled, turn ON pin 8 of the DIP switch to disable the Action on Error function.

Appendix 1-2 Screen Configuration

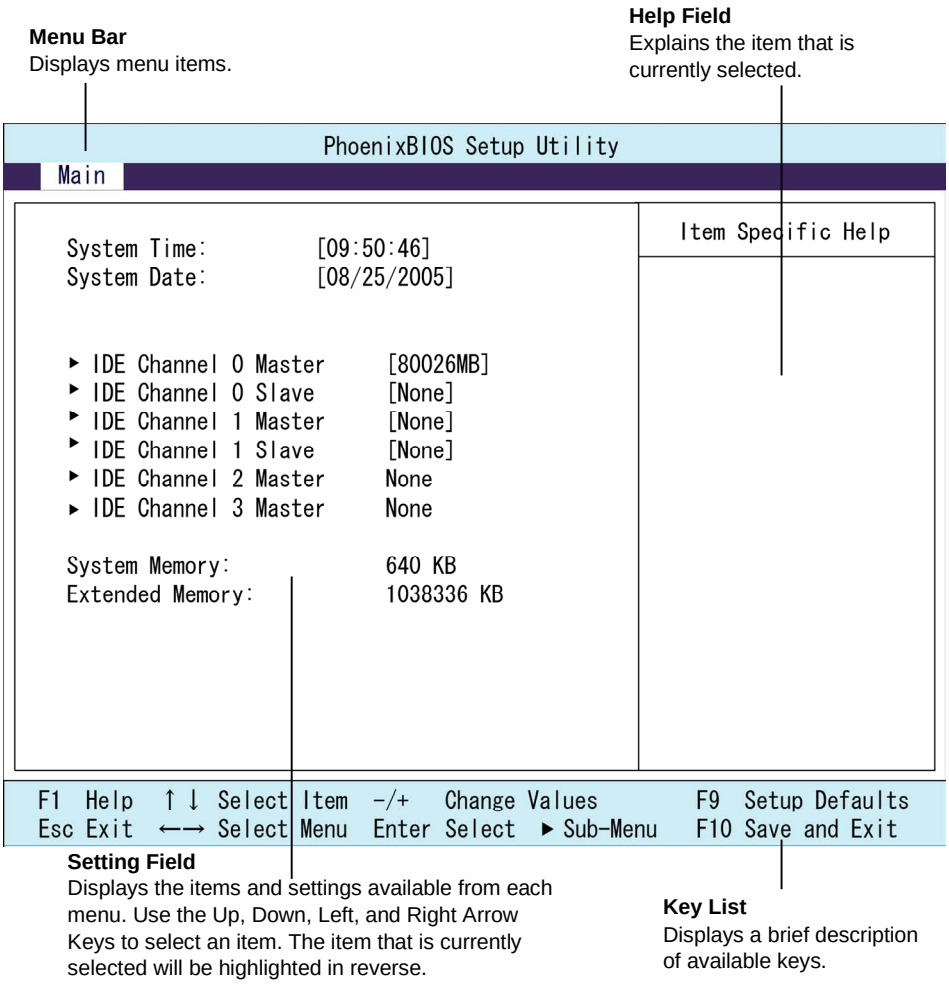

Appendix 1-3 BIOS Setup Menu Keys

BIOS setup items can only be set from a keyboard. The following table lists the keys that are available from the BIOS setup utility and what the keys mean.

Key	Meaning
← →	Switches menus.
↑↓	Selects the item that will be set.
–/+	Increases or decreases a value.
Tab	Moves to the next field.
Shift+Tab	Moves to the previous field.
F1	Displays the General Help Window for BIOS setup.
F9	Loads the default configuration value.
F10	Saves the settings to CMOS and exits the BIOS setup utility.
ESC	Moves to the Exit Menu or moves to the Main Menu from a Submenu.
Enter	Sets a value and moves to a submenu if one is available.

Appendix 1-4 Menu Configuration

The BIOS Menu lists the following selections. Submenus may be provided for more specific settings.

Menu	Description	Reference
Main	Sets the basic system configuration options.	Appendix -1-5
Advanced	Sets the Advanced Features available on your system's chipset.	Appendix -1-6
Intel	Sets the ECC and video function options for the chipset.	Appendix -1-7
Security	Sets the user and supervisor passwords as well as the backup and virus check options.	Appendix -1-8
Power	Sets the operation that will be executed after a power failure.	Appendix -1-9
Boot	Sets the device startup order.	Appendix -1-10
Exit	Exits the setup menu and saves, restores, or deletes EEPROM settings.	Appendix -1-11

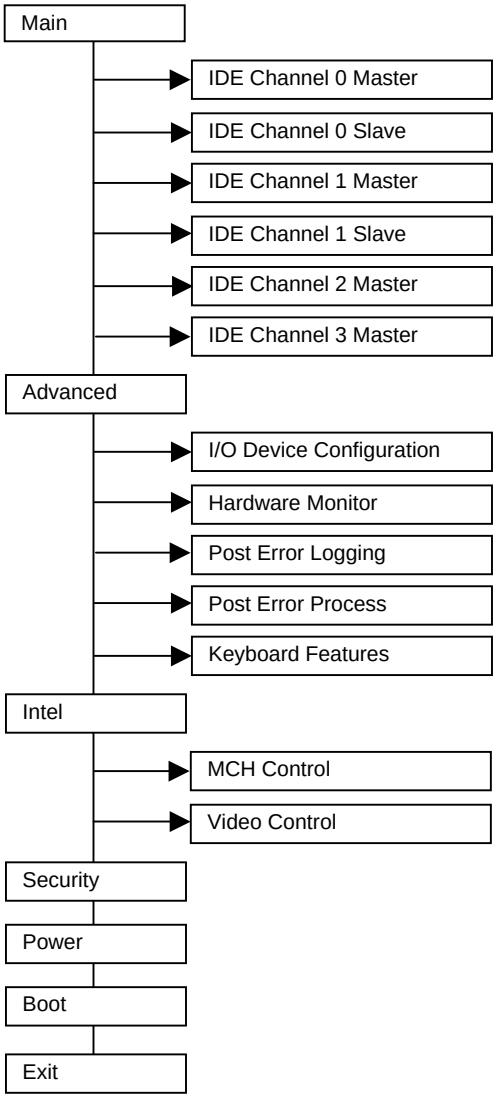

Appendix 1-5 Main Menu

Main Menu: Basic System Configuration Settings

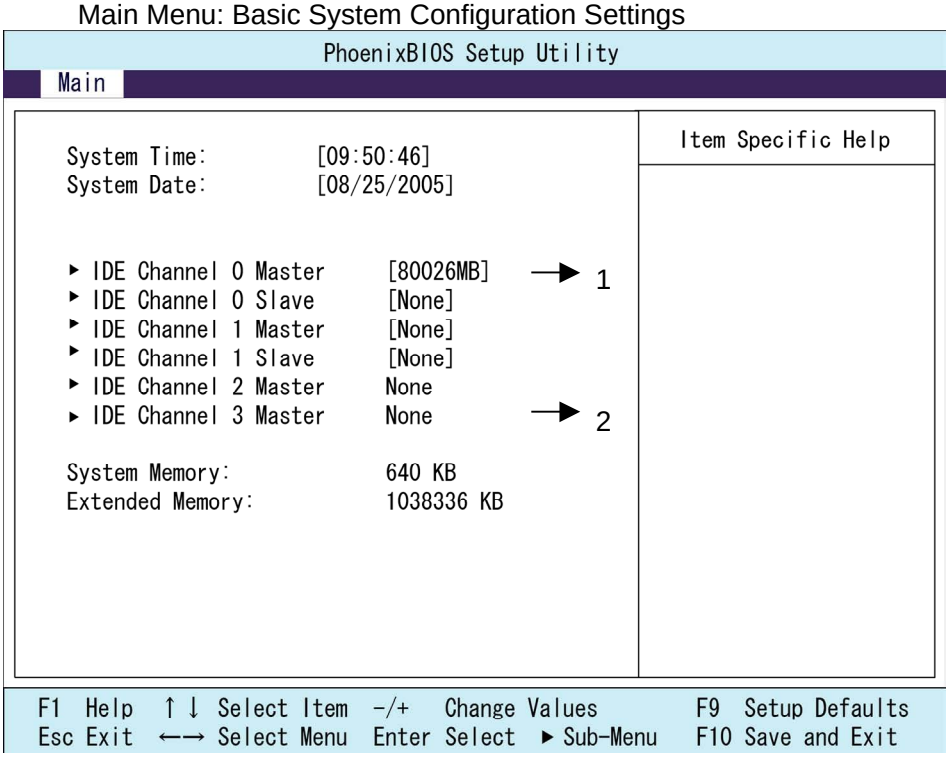

Function	Setting	Description
System Time	HH:MM:SS	Sets the system clock.
System Date	MM/DD/YYYY	Sets the system date.
IDE Channel 0 Master & Slave		Moves to submenu 1.
IDE Channel 1 Master & Slave	[None]	Secondary IDE is not available.
IDE Channel 2 & 3 Master		Moves to submenu 2.
System Memory	N/A	Displays the capacity of the conventional memory detected at startup.
Extended Memory	N/A	Displays the capacity of the extended memory detected at startup.

Note: The settings shown in the table are initial values.

(1) IDE Channel 0 Master Sub-Menu: IDE Settings

```
                    PhoenixBIOS Setup Utility
 Main
 IDE Channel 0 Master      [80026MB]          Item Specific Help

   Type:                     [Auto]
                           LBA Format
   Total Sectors:            156301488
   Maximum Capacity:         80026MB

   Multi-Sector Transfers:   [16 Sectors]
   LBA Mode Control:         [Enabled]
   32 Bit I/O:               [Disabled]
   Transfer Mode:            [FPIO 4/ DMA 2]
   Ultra DMA Mode:           [Disabled]

 F1  Help  ↑↓ Select Item  -/+   Change Values        F9  Setup Defaults
 Esc Exit  ←→ Select Menu  Enter Select  ▶ Sub-Menu   F10 Save and Exit
```

Function	Setting	Description
Type	[Auto] None ATAPI Removable CD-ROM IDE Removable Other ATAPI User	Sets the type of device that is connected to the system. Normally select the *Auto* option.
Total Sectors	N/A	Displays the total number of sectors.
Maximum Capacity	N/A	Displays the total capacity.
Multi-Sector Transfers (Not available if the Auto option is selected.)	[16 Sectors]	Sets the number of sectors sent per block.
LBA Mode Control (Not available if the Auto option is selected.)	[Enabled]	Enables the LBA mode.
32 Bit I/O	[Disabled] Enabled	Enables or disables 32-bit data transfers between the CPU and IDE.
Transfer Mode (Not available if the Auto option is selected.)	[FPIO 4/ DMA 2]	Selects the method used to transfer data between the hard disk and system memory.
Ultra DMA Mode (Not available if the Auto option is selected.)	[Disabled]	Sets the ultra DMA mode for transferring data.

Note: The settings shown in the table are initial values.
The settings shown in the table above are values with an 80-Gbyte hard disk connected.

(2) IDE Channel 2 & 3 Master Sub-Menu: IDE Settings

```
                    PhoenixBIOS Setup Utility
 Main
 IDE Channel 2 Slave      [None]          Item Specific Help

   Type:                  [Auto]

   Multi-Sector Transfers: [Disabled]
   LBA Mode Control:       [Disabled]
   32 Bit I/O:             [Disabled]
   Transfer Mode:          [Standard]
   Ultra DMA Mode:         [Disabled]

 F1  Help  ↑↓ Select Item  -/+   Change Values        F9  Setup Defaults
 Esc Exit  ←→ Select Menu  Enter Select  ▶ Sub-Menu   F10 Save and Exit
```

Function	Setting	Description
Type	[Auto] None ATAPI Removable CD-ROM IDE Removable Other ATAPI User	Sets the type of device that is connected to the system.
Multi-Sector Transfers (Not available if the Auto option is selected)	[Disabled]	Sets the number of sectors sent per block.
LBA Mode Control (Not available if the Auto option is selected)	[Disabled]	Enables the LBA mode.
32 Bit I/O	[Disabled] Enabled	Enables or disables 32-bit data transfers between the CPU and IDE.
Transfer Mode (Not available if the Auto option is selected)	[Standard]	Selects the method used to transfer data between the hard disk and system memory.
Ultra DMA Mode (Not available if the Auto option is selected)	[Disabled]	Sets the ultra DMA mode for transferring data.

Note: The settings shown in the table are initial values.
The settings shown in the table above are values with a SATA hard disk connected.

Appendix 1-6 Advanced Menu

Advanced Menu: Chipset Expanded Function Settings

```
                    PhoenixBIOS Setup Utility
                    Advanced

                                                  Item Specific Help
   Installed O/S:                    [WinXP]
   Reset Configuration Data:         [No]
   Large Disk Access Mode:           [DOS]
   Serial ATA:                       [Disabled]

   ► I/O Device Configuration        →  3
   ► Hardware Monitor                →  4
   ► Post Error Logging              →  5
   ► Post Error Process              →  6
   ► Keyboard Features               →  7

   Legacy USB Support:               [Disabled]
   Summary screen:                   [Enabled]
   Boot-time Diagnostic Screen:      [Enabled]
   QuickBoot Mode:                   [Disabled]

 F1  Help  ↑↓ Select Item  -/+   Change Values        F9  Setup Defaults
 Esc Exit  ←→ Select Menu  Enter Select  ► Sub-Menu   F10 Save and Exit
```

Function	Setting	Description
Installed O/S	Other Win2000 [WinXP]	Selects the operating system that is installed on your system.
Reset Configuration Data	[No] Yes	Select *Yes* if you want to clear Extended System Configuration Data (ESCD) area.
Large Disk Access Mode	Other [DOS]	Sets the large disk access mode.
Serial ATA	[Disabled] Enabled	Enables or disables the serial ATA bus.
SATA RAID Enable (Serial ATA: Available only when enabled is selected)	[Disabled] Enabled	Enables or disables RAID functions via serial ATA.
I/O Device Configuration		Moves to submenu 3.
Hardware Monitor		Moves to submenu 4.
Post Error Logging		Moves to submenu 5.
Post Error Process		Moves to submenu 6.
Keyboard Features		Moves to submenu 7.
Legacy USB Support	[Disabled] Enabled	Enables or disables support for the Legacy Universal Serial Bus. Normally select the *Disabled* option.
Summary Screen	Disabled [Enabled]	Displays the System Summary Screen.
Boot-time Diagnostic Screen	Disabled [Enabled]	Displays the Self-diagnosis Screen. The OMRON Logo is not displayed when this function is enabled.
Quick Boot Mode	[Disabled] Enabled	Selects the Quickboot Mode for startup.

Note: The settings in the table are initial values.

(3) I/O Device Configuration Settings

PhoenixBIOS Setup Utility

Advanced

I/O Device Configuration		Item Specific Help
COM Port 1:	[Enabled]	
Base I/O address:	[3F8]	
Interrupt:	[IRQ 4]	
COM Port 2:	[Enabled]	
Base I/O address:	[2F8]	
Interrupt:	[IRQ 3]	
COM Port 3:	[Enabled]	
Base I/O address:	[3E8]	
Interrupt:	[IRQ 6]	
COM Port 4:	[Enabled]	
Base I/O address:	[2E8]	
Interrupt:	[IRQ 5]	

F1 Help ↑↓ Select Item –/+ Change Values F9 Setup Defaults
Esc Exit ←→ Select Menu Enter Select ▲ Sub-Menu F10 Save and Exit

Function	Setting	Description
COM Port 1	Disabled [Enabled]	Enables or disables COM port 1.
Base I/O address	[3F8] 2FB 3E8 2E8	Selects the I/O address allocated to the COM port.
Interrupt	[IRQ 4] IRQ 3	Selects the IRQ allocated to the COM port.
COM Port 2	Disabled [Enabled]	Enables or disables COM port 2.
Base I/O address	3F8 [2F8] 3E8 2E8	Selects the I/O address allocated to the COM port.
Interrupt	IRQ 4 [IRQ 3]	Selects the IRQ allocated to the COM port.
COM Port 3	Disabled [Enabled]	Enables or disables COM port 3.
Base I/O address	3F8 2FB [3E8] 2E8 220 228 238 338	Selects the I/O address allocated to the COM port.
Interrupt	IRQ 5 [IRQ 6]	Selects the IRQ allocated to the COM port.
COM Port 4	Disabled [Enabled]	Enables or disables COM port 4.
Base I/O address	3F8 2FB 3E8 [2E8] 220 228 238 338	Selects the I/O address allocated to the COM port.
Interrupt	[IRQ 5] IRQ 6	Selects the IRQ allocated to the COM port.

Note: The settings in the table are initial values.

(4) Hardware Monitor Settings

```
PhoenixBIOS Setup Utility
Advanced

Hardware Monitor                          Item Specific Help

V+12 =              12.12 V
V+1.5 =             1.49 V
V+1.8 =             1.80 V
V+2.5 =             2.48 V
V+3.3 =             3.28 V
V+5 =               5.18 V
Vccp =              1.04 V
VHVCC =             3.28 V
CPU Temp =          27 ℃/80 ° F
Ambient Temp =      33 ℃/91 ° F
FAN 1 speed =       4671 RPM
FAN 2 speed =       0 RPM

F1  Help  ↑↓ Select Item  -/+   Change Values        F9  Setup Defaults
Esc Exit  ←→ Select Menu  Enter Select  ► Sub-Menu   F10 Save and Exit
```

Function	Setting	Description
V+12	Display only	+12 V
V+1.5	Display only	+1.5 V
V+1.8	Display only	+1.8 V
V+2.5	Display only	+2.5 V
V+3.3	Display only	+3.3 V
V+5	Display only	+5 V
Vccp	Display only	+1.05 V
VHVCC	Display only	+3.3 V
CPU Temp	Display only	CPU temperature
Ambient Temp	Display only	System temperature
FAN 1 speed	Display only	CPU fan rpm
FAN 2 speed	Display only	System fan rpm

Note: The settings in the table are initial values.
The display will show 0 RPM if no fan is connected.

(5) POST Error Logging: POST Error Log Settings

```
PhoenixBIOS Setup Utility
Advanced

Post Error Logging                    Item Specific Help

Post Error Logging     [Enabled]
Clear All Error

View Post Error Log    [View Log]
1.   Post Error Code:  54h Time:14 M/D:08/23
2.   Post Error Code:  51h Time:14 M/D:08/23
3.   Post Error Code:  54h Time:16 M/D:08/24
4.   Post Error Code:  51h Time:16 M/D:08/24

F1  Help  ↑↓ Select Item  -/+   Change Values        F9  Setup Defaults
Esc Exit  ←→ Select Menu  Enter Select  ► Sub-Menu   F10 Save and Exit
```

Function	Setting	Description
Post Error Logging	Disabled [Enabled]	Enables or disables POST error logging when an error occurs.
Clear All Error	N/A	Deletes all POST error logs.
View Post Error Log	[View Log] Hide Log	Displays the POST error logs. Up to 32 POST error log records can be saved in the EEPROM.

Note: The settings in the table are initial values.

(6) POST Error Process Settings

```
PhoenixBIOS Setup Utility
Advanced

Post Error Process                    Item Specific Help

  Mode:  [Normal]

F1  Help  ↑↓ Select Item  -/+   Change Values        F9  Setup Defaults
Esc Exit  ←→ Select Menu  Enter Select  ▶ Sub-Menu   F10 Save and Exit
```

Function	Setting	Description
Mode	[Normal] Retry Auto	Selects the operation that will be performed when a POST error occurs. Normal: Shuts down after an error occurs. Retry: Shuts down when the number of retries is exceeded or turns the power OFF. Auto: Ignores the error and resumes startup.
Retry Counter (Mode: Available only when Retry is selected.)	1 2 [3] 4 . . 14 15	Sets the number of retries from 1 to 15.
Timer (Mode: Available only when Retry or Auto is selected.)	1 [3] 5 10 15	Sets the amount of time before the next retry after a POST error occurs.
Auto Resume (Mode: Available only when Retry is selected.)	[Enabled] Disabled	Selects whether to ignore the error when the number retries for a POST error is exceeded and resumes startup.
Power Off (Mode: Available only when Retry is selected.)	Enabled [Disabled]	Selects whether to turn the power OFF when the number of retries is exceeded for a POST error.

Note: The settings in the table are initial values.

(7) Keyboard Features

```
PhoenixBIOS Setup Utility
Advanced

Keyboard Features                          Item Specific Help

NumLock:                      [Auto]
Key Click:                    [Disabled]
Keyboard auto-repeat rate:    [30/sec]
Keyboard auto-repeat delay:   [1/2 sec]

KBC Error                     [Disabled]

F1  Help  ↑↓ Select Item  -/+   Change Values        F9  Setup Defaults
Esc Exit  ←→ Select Menu  Enter Select  ► Sub-Menu   F10 Save and Exit
```

Function	Setting	Description
NumLock	[Auto] On Off	Enables the NumLock Key on the keyboard.
Key Click	[Disabled] Enabled	Enables or disables the audible beep when a key is pressed on the keyboard.
Keyboard auto-repeat rate	[30/sec] 26.7/sec 21.8/sec 18.5/sec 13.3/sec 10/sec 6/sec 2/sec	Selects the number of times per second to repeat a keystroke when you hold a key down.
Keyboard auto-repeat delay	1/4 sec [1/2 sec] 3/4 sec 1 sec	Selects the delay time after a key is held down before it begins to repeat the keystroke.
KBC Error	[Disabled] Enabled	Enables or disables the keyboard connection check at startup. Normally select the *Disabled* option.

Note: The settings in the table are initial values.

Appendix 1-7 Intel Menu

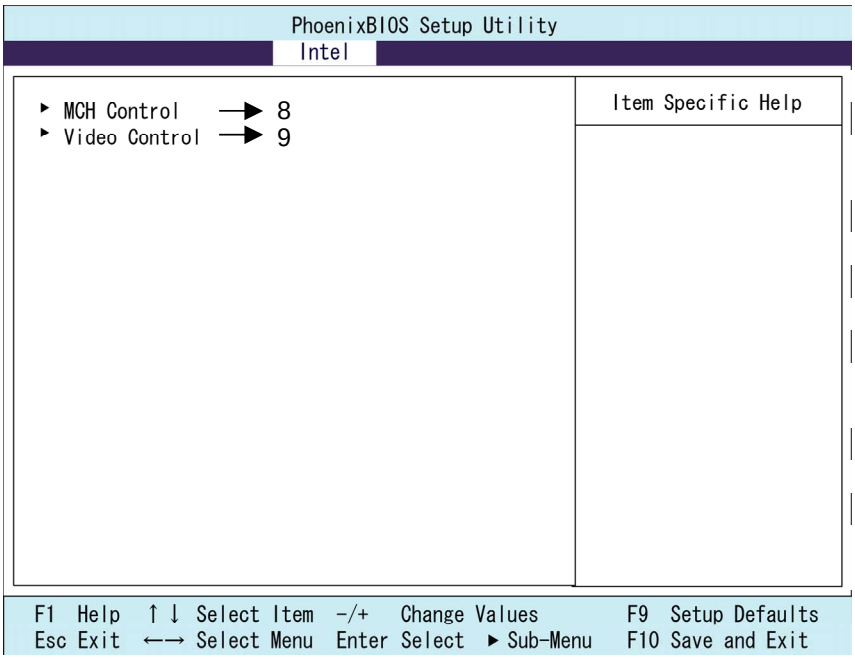

Function	Setting	Description
MCH Control		Moves to submenu 8.
Video Control		Moves to submenu 9.

(8) MCH Control

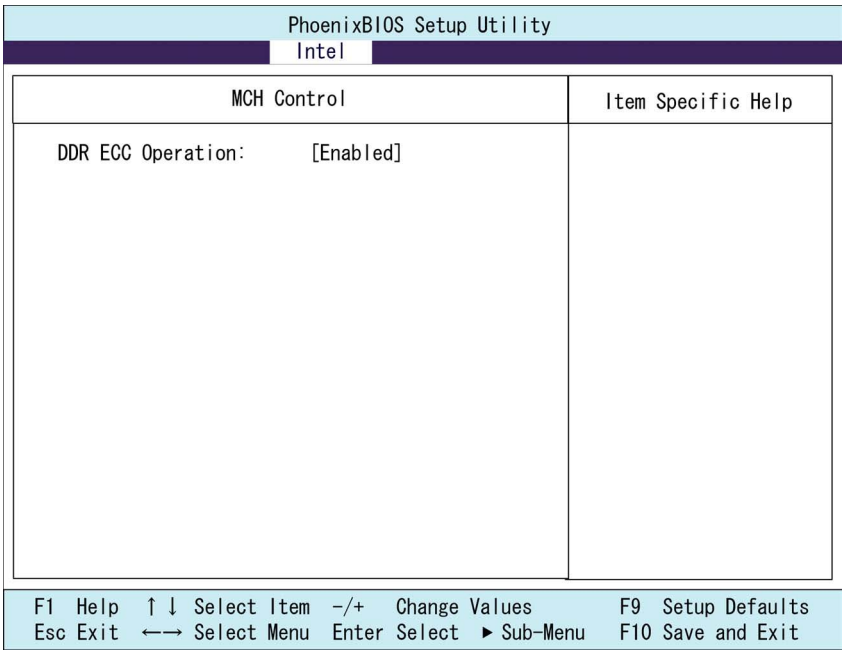

Function	Setting	Description
DDR ECC Operation (Available only when ECC memory is used)	Disabled [Enabled]	Enables or disables ECC functions. It is disabled automatically when non-ECC memory is used.

Note: The settings in the table are initial values.

(9) Video Control

```
PhoenixBIOS Setup Utility
Intel

Video Control                                  Item Specific Help

Default Primary Video Adapter:    [PCI]
IGD-Memory Size:                  [UMA = 8MB]
IGD-Boot Type:                    [VBIOS Default]
IGD-LCD Panel Type:               [1024×768 LVDS]

F1  Help  ↑↓ Select Item  -/+   Change Values        F9  Setup Defaults
Esc Exit  ←→ Select Menu  Enter Select  ► Sub-Menu   F10 Save and Exit
```

Function	Setting	Description
Default Primary Video Adapter	[PCI] AGP	Selects the primary video adapter that will be used.
IGD - Memory Size	UMA = 1MB [UMA = 8MB] UMA = 16MB UMA = 32MB	Selects the size of memory that will be used for graphics.
IGD - Boot Type	[VBIOS Default] CRT LCD CRT + LCD EFP CRT + EFP	Selects the type of monitor output provided at startup. Selecting VBIOS default will provide either a CRT or a DVI (EFP) monitor output. Note that VBIOS cannot provide a VGA and DVI monitor output at the same time. If a VGA and a DVI monitor are connected at the same time, the DVI monitor will be used.
IGD – LCD Panel Type	640×480 LVDS 800×600 LVDS [1024×768 LVDS] 1280×1024 LVDS 1400×1050 LVDS1 1400×1050 LVDS2 1600×1200 LVDS 8: Reserved … 16: Reserved	Selects the type of LCD monitor that will be used.

Note: The settings in the table are initial values.
The NSA-series Box-type Industrial PC does not have a connector for a CRT monitor.

Appendix 1-8 Security Menu

Security Menu: Supervisor Password, Backup and Virus Check Settings

```
                    PhoenixBIOS Setup Utility
                          Security

  FirstWare Authentication Level   [Hight]        Item Specific Help
  Supervisor Password Is:           Clear
  User Password Is:                 Clear

  Set Supervisor Password          [Enter]
  Set User Password                [Enter]

  Fixed disk boot sector            [Normal]
  Virus check reminder:            [Disabled]
  System backup reminder:          [Disabled]
  Password on boot:                [Disabled]

 F1  Help  ↑↓ Select Item  -/+   Change Values        F9  Setup Defaults
 Esc Exit  ←→ Select Menu  Enter Select  ▶ Sub-Menu   F10 Save and Exit
```

Function	Setting	Description
FirstWare Authentication Level	[High] Medium Low	Sets the FirstWare authentication level. This setting is not available if FirstWare is not used.
Supervisor Password	Display only (Clear/Set)	Displays the supervisor password status.
User Password	Display only (Clear/Set)	Displays the user password status.
Set Supervisor Password	Up to seven alphanumeric characters	Sets the supervisor password.
Set User Password	Up to seven alphanumeric characters	Sets the user password.
Fixed disk boot sector	[Normal] Write Protect	Sets the level of protection for the boot sector.
Virus check reminder System backup	[Disabled] Daily Weekly Monthly	Displays backup and virus check reminders at startup. Enabled when a password is set.
Password on boot	[Disabled]	Requires a password on startup if enabled.

Note: The settings in the table are initial values.

Appendix 1-9 Power Menu

Power Menu: Power Management Settings

```
PhoenixBIOS Setup Utility
                                   Power
                                                    Item Specific Help
  After Power Failure:      [Power On]

  F1  Help  ↑↓ Select Item  -/+   Change Values        F9  Setup Defaults
  Esc Exit  ←→ Select Menu  Enter Select  ► Sub-Menu   F10 Save and Exit
```

Function	Setting	Description
After Power Failure	Stay OFF Last State [Power ON]	Selects the operation executed after a power failure. Stay OFF: Always stay OFF Last State: Return to the most recent state. Power ON: Always stay ON

Note: The settings in the table are initial values.

Note Normally, select the Power ON setting because the NSA-series CPU Box does not have a START switch.

Appendix 1-10 Boot Menu

Boot Menu: Startup Device Settings

```
PhoenixBIOS Setup Utility
                                                    Boot
                                                    Item Specific Help
  Removable Devices
  +Hard Drive
  CD-ROM Drive
  Network Boot

  F1  Help  ↑↓ Select Item  -/+   Change Values        F9  Setup Defaults
  Esc Exit  ←→ Select Menu  Enter Select  ▶ Sub-Menu   F10 Save and Exit
```

Function	Setting	Description
Priority of the Boot Device	Removable Device Hard Drive CD-ROM Drive Network Boot	Specifies the priority in the search for a startup device.

Note: Press the Enter Key to show additional devices when a value has a plus (+) sign next to it.

Appendix 1-11 Exit Menu

Exit Menu: Exiting the Setup Menu

```
PhoenixBIOS Setup Utility
                                                    Exit

                                                    Item Specific Help
   Exit Saving Changes
   Exit Discarding Changes
   Load Setup Defaults
   Discard Changes
   Save Changes

   Backup CMOS              [Press Enter]
   Restore CMOS             [Press Enter]

   Clear EEP-ROM            [Press Enter]

 F1  Help  ↑↓ Select Item  -/+   Change Values        F9  Setup Defaults
 Esc Exit  ←→ Select Menu  Enter Select  ► Sub-Menu   F10 Save and Exit
```

Function	Setting	Description
Exit Saving Changes	N/A	Saves changes and exits.
Exit Discarding Changes	N/A	Discards changes and exits.
Load Setup Defaults	N/A	Returns to default settings.
Discard Changes	N/A	Discards changes.
Save Changes	N/A	Saves changes.
Backup CMOS	[Press Enter]	Saves the current CMOS settings to EEPROM.
Restore CMOS	[Press Enter]	Restores the CMOS settings in EEPROM to the CMOS.
Clear EEP-ROM	[Press Enter]	Clears all CMOS settings and POST error log data in EEPROM.

Note: The settings in the table are initial values.

Appendix 2 Using the Enhanced Write Filter

This section describes the use of the Enhanced Write Filter (EWF) for increasing the reliability of the NSA-series Box-type Industrial PC.

Appendix 2-1 About the EWF Function

To protect the OS and application software stored in the DiskOnModule (DOM) storage drive of the NSA-series Box-type Industrial PC, it is possible to prohibit the writing of data to the DOM. This is done by using the Enhanced Write Filter function of the Windows XP Embedded OS. By using this function, any data that is to be written from the OS or application software is emulated in the main memory, so it appears to the user that the data is written or settings are changed in the same manner as in ordinary Windows operation, but in reality all data and settings changes are deleted each time Windows is restarted or the power is turned OFF. The EWF function is disabled when the NSA-series Box-type Industrial PC is shipped from the factory. To use the EWF function, you must enable it (refer to *Appendix 2-3*).
When the EWF function is enabled and it is necessary to update data on the DOM due to settings changes or file updates, the updated content can be reflected as described in Appendix 2-4. Another way to do this is to disable the EWF function and update the data to the DOM directly, as described in Appendix 2-5. When any change is made to the EWF function, the Unit must be restarted for the change to take effect.

Appendix 2-2 Confirming the Operating State of the EWF Function

Display the command prompt screen, then input the following command to confirm the operating state of the EWF function.
Command: ewfmgr c:

Execution Example

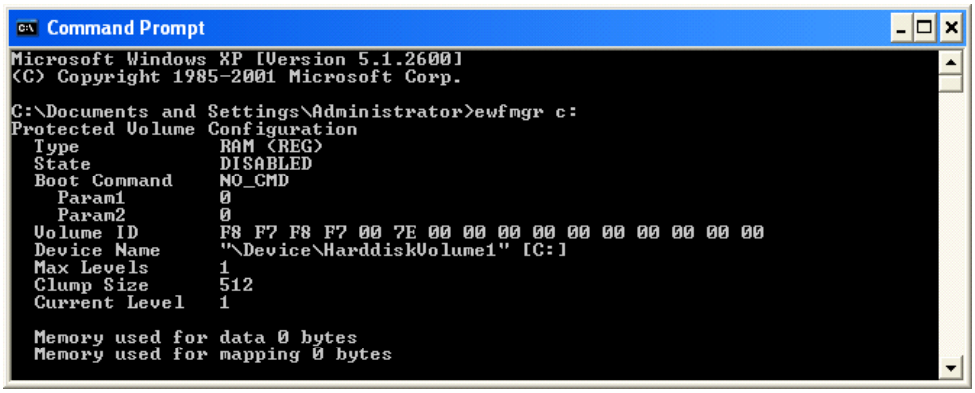

Definition: State

Displays the operating state of the EWF function.
ENABLED – Indicates that the EWF function is enabled. The function will emulate writing data to the DOM.
DISABLED – Indicates that the EWF function is disabled. Data will be directly written to the DOM.

Appendix 2-3 Enabling the EWF Function

Display the command prompt screen, then input the following command to enable the EWF function. After the Unit is normally restarted, the data on the DOM will not be directly written, but will be emulated on the main memory.
Command: ewfmgr c: -enable
Execution example

```
Command Prompt
Microsoft Windows XP [Version 5.1.2600]
(C) Copyright 1985-2001 Microsoft Corp.

C:\Documents and Settings\Administrator>ewfmgr c: -enable
*** Enabling overlay

Protected Volume Configuration
  Type              RAM (REG)
  State             DISABLED
  Boot Command      ENABLE
    Param1          0
    Param2          0
  Volume ID         F8 F7 F8 F7 00 7E 00 00 00 00 00 00 00 00 00 00
  Device Name       "\Device\HarddiskVolume1" [C:]
  Max Levels        1
  Clump Size        512
  Current Level     1

  Memory used for data 0 bytes
  Memory used for mapping 0 bytes
```

Appendix 2-4 Updating Data on the DOM When the EWF Function Is Enabled

Display the command prompt screen, then input the following command to update the data on the DOM even when the EWF function is enabled. The next time that the Unit is normally restarted or shut down, the data that was emulated on the main memory will be reflected on the DOM.
Command: ewfmgr c: - commit
Execution example

```
Command Prompt
Microsoft Windows XP [Version 5.1.2600]
(C) Copyright 1985-2001 Microsoft Corp.

C:\Documents and Settings\Administrator>ewfmgr c: -commit
*** Committing overlay to the protected volume.

Protected Volume Configuration
  Type              RAM (REG)
  State             ENABLED
  Boot Command      COMMIT
    Param1          0
    Param2          0
  Volume ID         F8 F7 F8 F7 00 7E 00 00 00 00 00 00 00 00 00 00
  Device Name       "\Device\HarddiskVolume1" [C:]
  Max Levels        1
  Clump Size        512
  Current Level     1

  Memory used for data 3322880 bytes
  Memory used for mapping 4096 bytes
```

Appendix 2-5 Disabling the EWF Function

Display the command prompt screen, then input the following command to disable the EWF function. The next time that the Unit is normally restarted or shut down, the data that was emulated on the main memory will be reflected on the DOM. After the Unit is normally restarted, the data on the DOM will be directly written.
Command: ewfmgr c: - commitanddisable
Execution example

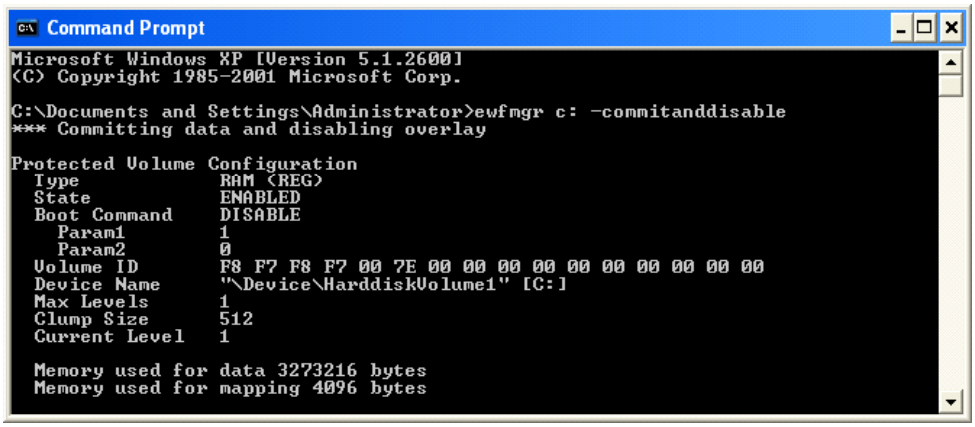

Appendix 2-6 Precautions

- When the EWF function is enabled, since the data written to the DOM is emulated on the main memory, the system memory space will be reduced and operation may become unstable when a large amount of data is written. To prevent this problem, it is recommended that large amounts of data be written to a memory other than the DOM, such as a memory card.
- The writing service life for each block of NAND flash memory of the DOM on this Unit is 100,000 writes. In order to increase the reliability of the DOM, it is recommended that the Unit be used with the EWF function enabled.
- In the Industrial PC, the OS and RAS Utility store the event logs in the D: drive. Consequently, the EWF function must be disabled with respect to the D: drive in order to save the event logs even after the Industrial PC is restarted.

Appendix 2-7 Reference

For detailed specifications of the EWF function, see the following URL addresses.

EWF Definitions:
http://msdn.microsoft.com/library/default.asp?url=/library/en-us/xpehelp/html/xerefewfdefinitions.asp

EWF Overview:
http://msdn.microsoft.com/library/default.asp?url=/library/en-us/xpehelp/html/xeconewfoverview.asp

EWF Architecture:
http://msdn.microsoft.com/library/default.asp?url=/library/en-us/xpehelp/html/xeconewfarchitecture.asp

EWF Manager Commands:
http://msdn.microsoft.com/library/default.asp?url=/library/en-us/xpehelp/html/xetskewfmanagerusage.asp

For detailed information on the usage and options of the ewfmgr command, designate the /? option from the command prompt to display the help section.

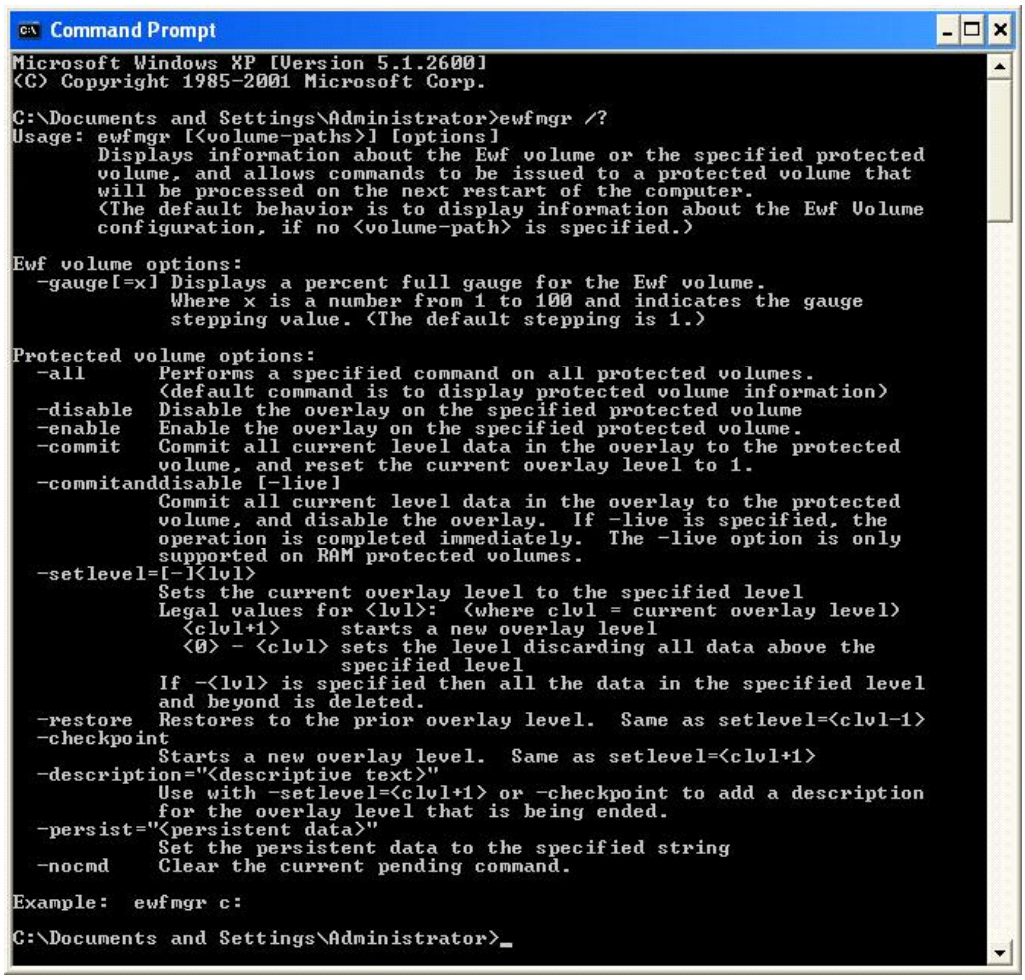

Appendix 3 Precautions for Changing Factory Settings for Windows XP Embedded

When changing the factory settings for the Windows XP Embedded system that is preinstalled in NSA-series Box-type Industrial PCs, keep the following points in mind.

- The Windows firewall is enabled when the product is shipped from the factory. Make the appropriate settings as required.
- The administrator password is not set when the product is shipped from the factory. Set a password as required. If a password has been set, however, a keyboard will be required when logging on.
- To use a USB-connected floppy disk drive, keyboard, or mouse when starting Windows to update the BIOS or recover the Windows system, select *Advanced* from the BIOS set-up menu and set *Legacy USB Support* to *Enabled*.
- Windows XP Embedded is an OS designed for embedded use. Some application programs that operate on the Windows XP Professional OS may not operate on the Windows XP Embedded OS of an NSA-series Box-type Industrial PC. In addition, the Windows components cannot be added and deleted by selecting *Add or Remove Programs* from the *Control Panel*.

Appendix 4 Connecting an NE1S-Series CPU Unit

Two serial ports cannot be used at the same time if the NE Programmer is installed in the NSA-series Box-type Industrial PC and an NE1S-Series CPU Unit is connected using the USB port. The use of either COM1 or COM 2 must be prohibited.

1. Start the NSA-series Box-type Industrial PC and open the Control Panel from the **Start** Button at the bottom left of the screen. Select *System*.

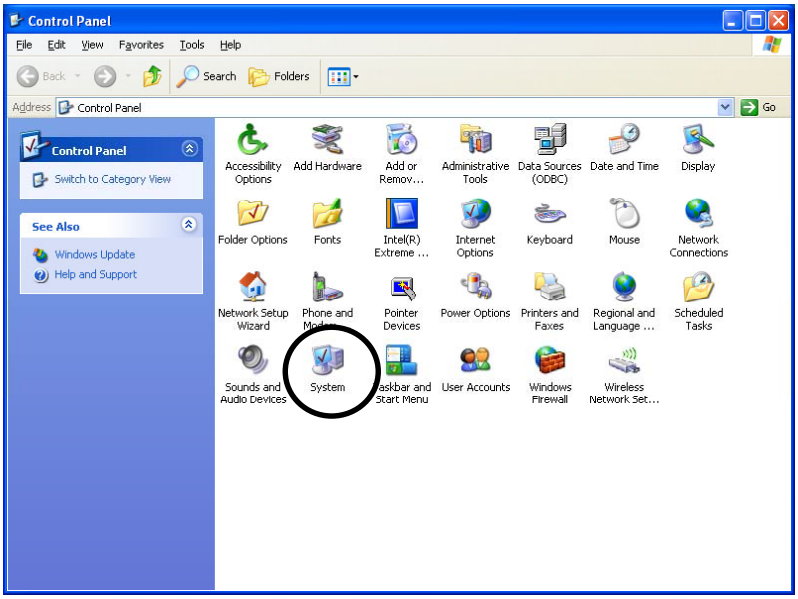

2. Click the **Hardware** Tab in the displayed System Properties Dialog Box, and click the **Device Manager** Button.

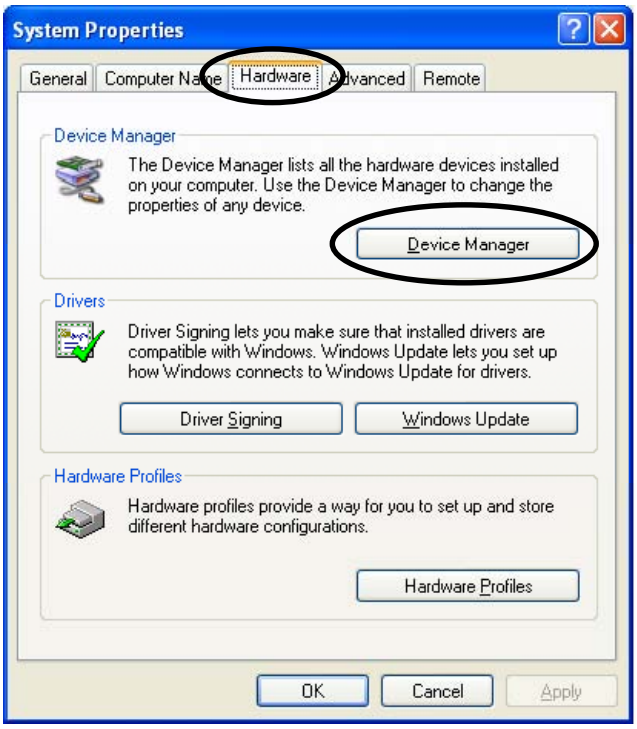

3. Select the communications port (either COM1 or COM2) from the Device manager.

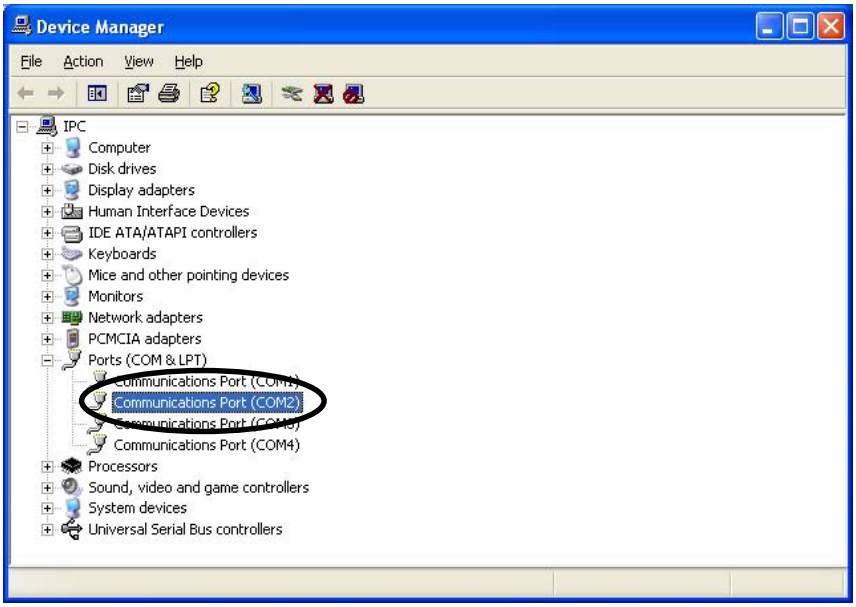

Note: COM3 and COM4 are used by the NSA-series Box-type Industrial PC system internally. Do not select these ports.

4. Click the **General** Tab in the displayed Communications Port Properties Dialog Box and change *Device usage* to *Do not use this device (disable)*, then click the **OK** Button.

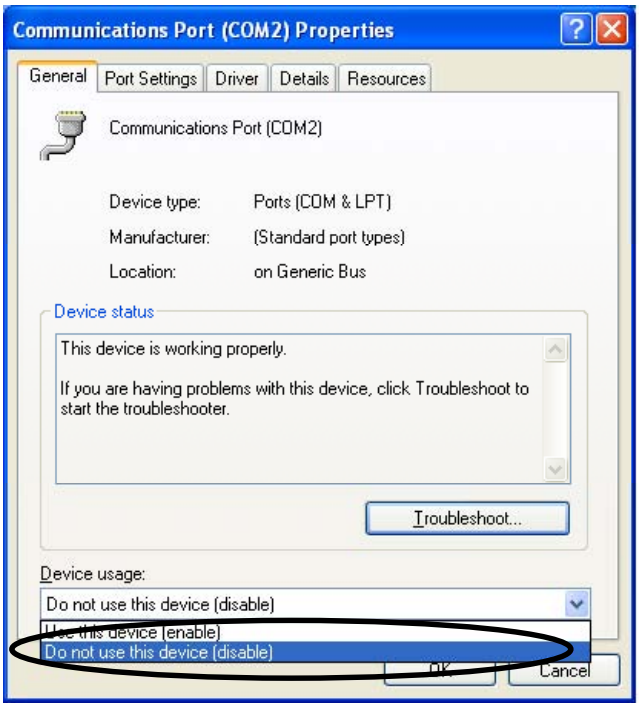

Appendix 5 Accessories

The following products are available as accessories for the NSA-series Industrial PC.

Product name	Model	Applicable Industrial PCs	Application
Replacement Battery	NSA-BAT01	NSA12/15-TX01 NSA-CPU□□	Replacement battery for motherboard and RAS board.
	NSA-BAT03	NSA12/15-TX11 NSA12/15-TX12	
Anti-reflection Sheet	NS12-KBA04	NSA12-TX01 NSA12-TX11 NSA12-TX12	Sheet to protect the display from reflection. Apply to the display.
	NS15-KBA04	NSA15-TX01 NSA-TX151□ NSA15-TX11 NSA15-TX12	
LCD Connection Cables	NSA-DU02 NSA-DU22 NSA-DU52	NSA-CPU□□ NSA-TX□□□/TY□□□	Cables for connecting the CPU Box and the Touch Panel. NSA-DU02 is for a stacked connection.
Memory Cards	NSA-CEX02-J NSA-CEX04-J NSA-CEX08-J	NSA12/15-TX11 NSA12/15-TX12	Memory Card with Japanese Windows XP Embedded Version installed in advance
	NSA-CEX02-E NSA-CEX04-E NSA-CEX08-E		Memory Card with English Windows XP Embedded Version installed in advance

Appendix 6 Using Virtual Memory

The NSA-series Industrial PC is set by default to not use virtual memory. When physical memory alone is not sufficient, it is necessary to set up a paging file and use virtual memory. This appendix will explain how to set up a paging file on the DOM (Disk on module flash memory) so that virtual memory can be used.

Note There is a limit to the number of times that the DOM can be written. Setting a paging file will shorten the life of the DOM. Create a paging file on the DOM only when the physical memory capacity is insufficient. Generally, when using the NSA-series Industrial PC, it is recommended to return the paging file setting to its default setting, so that the paging file is not used.

Appendix 6-1 Setting and Deleting the Paging File

1. Select ***Start – Control Panel – Performance and Maintenance – System Properties***, and click on the **Advanced** Tab. Click the **Settings** Button in the Performance Area.

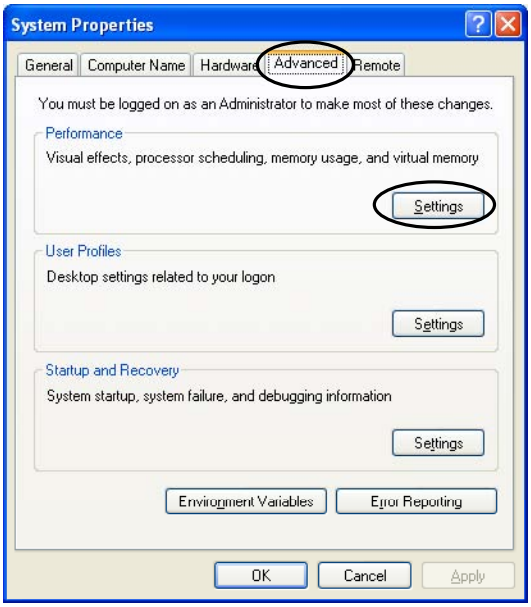

Note If the Control Panel is set to classic mode, select ***Start – Control Panel – System Properties***.

2. Click the **Advanced** Tab and then click the **Change** Button in the *Virtual Memory* Area.

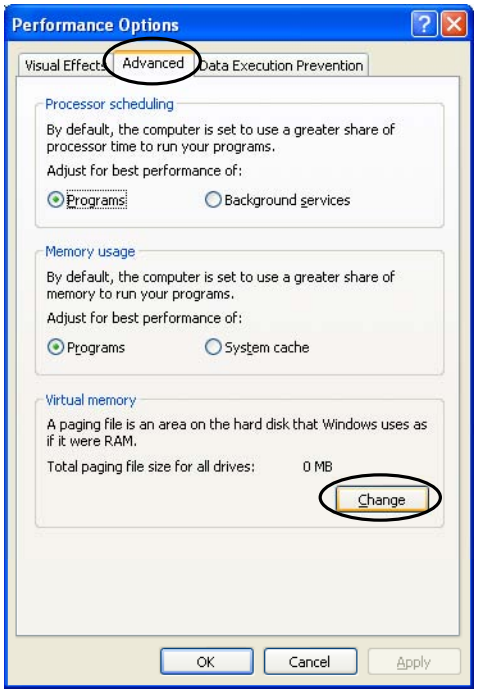

3. Next we will set up or delete the paging file.

   1) The following steps are for setting up the paging file.

   Make sure that the drive selected is C: (i.e., the DOM). Then select the *Custom size* Option, and input values to specify the *Initial size* and *Maximum size* Fields.

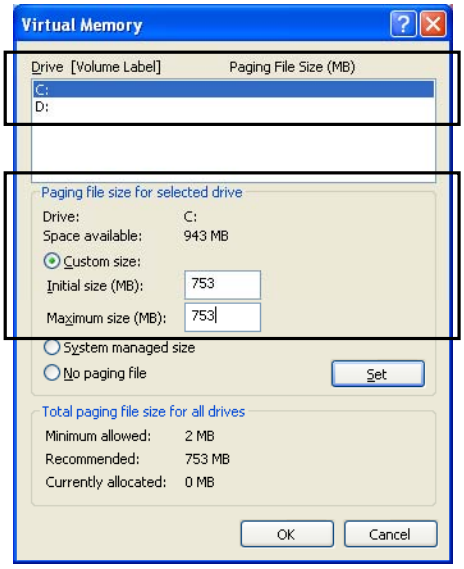

   In the *Initial size* Field, input the amount of memory that you want to use for the paging file.

   In the *Maximum size* Field, input the maximum amount of memory that you want to use for the paging file.

Note A paging file of the size that you specified will be created in the drive that you specified. In the example shown above, a 753-MB file will be created in the C: drive (i.e., the DOM). Check the amount of free space on the DOM, and set the initial size and maximum size appropriately.

   2) The following steps are for deleting a paging file that was previously set up.

Make sure that the drive selected is C: (i.e., the DOM). Then select the *No paging file* Option.

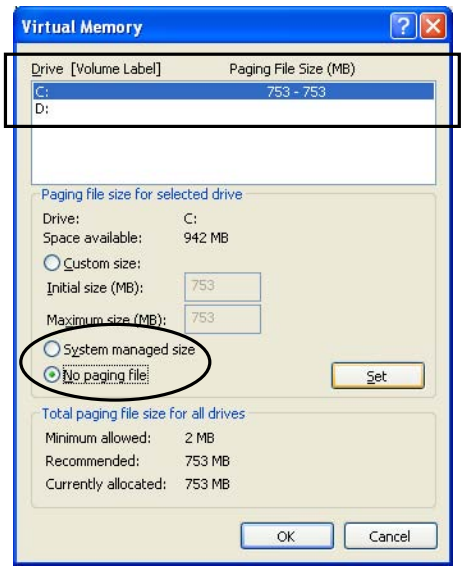

4. Click the **Set** Button, and then click the **OK** Button.

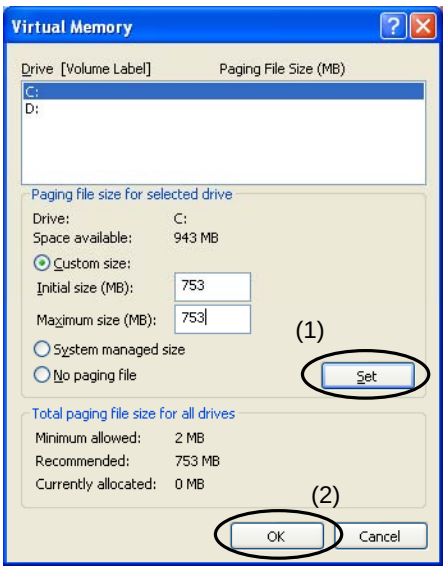

Note The *No paging file* Option will not take effect if you click the **OK** Button without first clicking the **Set** Button.

5. Make sure the paging file size that you selected appears in the Virtual memory Area.

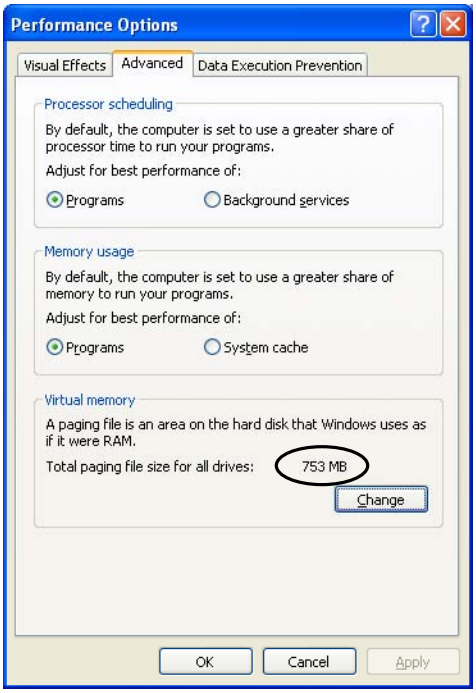

If the paging file size that you selected appears, the paging file setup has been done properly. If it does not appear, return to step 2, above, and make the settings again.

Note The operating system must be restarted for the settings to delete the paging file (selecting the *No paging file* Option in step 3, above) to take effect. After resetting the operating system, check the paging file size again and make sure that it is 0 MB.

Appendix 7 Complying with Lloyd's Register Shipping Standards

This product conforms to the shipbuilding standards of Lloyd's Register. To comply with the shipbuilding standards, there are restrictions on the location in which the NSA-series Box-type Industrial PC can be installed. Always contact your OMRON sales representative before using NSA-series Box-type Industrial PC on a ship.

Appendix 7-1 Installation of NSA-series Touch Panel

- The NSA-series Box-type Industrial PC must be installed in a control panel.
- The control panel must be equipped with an air conditioner.
- The entire surface of the NSA-series Box-type Industrial PC must be covered with electromagnetic shielding (specified below) that is also grounded using conductive tape (e.g., copper tape).
- Gaps in the door of the control panel must be completely filled or covered with gaskets or other material.

Electromagnetic Shielding

Manufacturer	Seiwa Electric Mfg, Co., Ltd.
Model	E09R13502P

* Electromagnetic shielding reduces the permeability by approximately 50%.

Note

- When using the USB port on the front panel, cut a hole in the Electromagnetic Shielding. Processing dimensions are given in the following figures.
- The USB port on the front panel must be used only for USB memory. USB memory must be connected directly to the port without an extension cable.

- **NSA-TX151B/S**

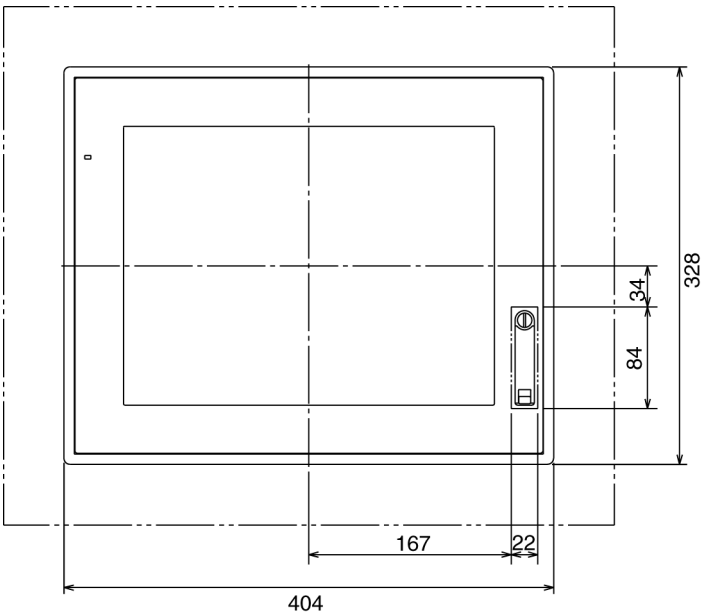

- **NSA-TY171B/S**

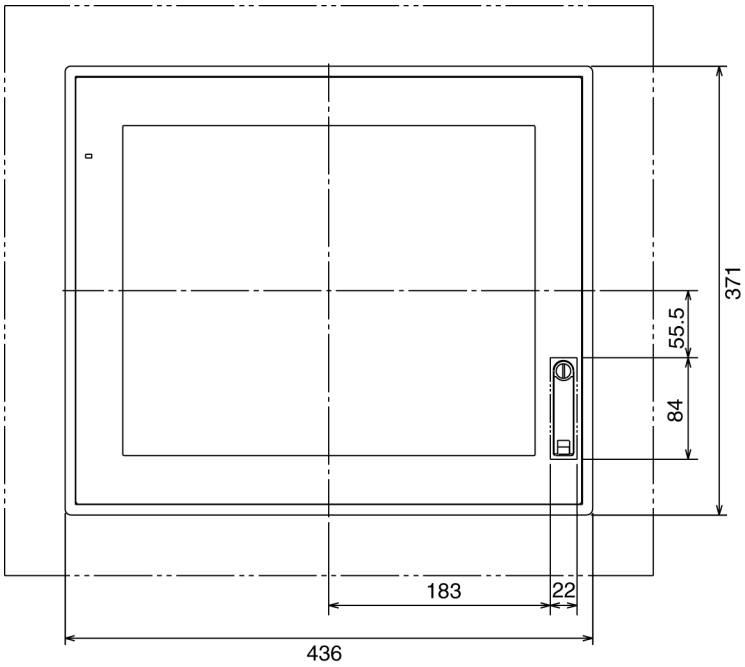

Appendix 7-2 Connecting the Power Supply

The power supply must be connected as shown in the following connection figures.

■ Connection Diagram

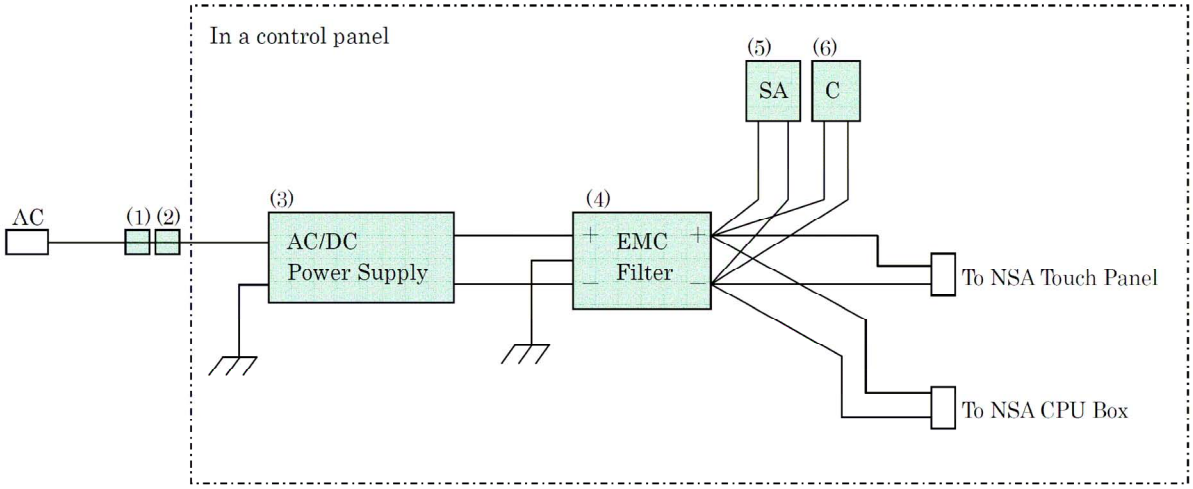

(1)(2) Ferrite Cores
Two ferrite cores must be attached to AC cable that exists the control panel.
Recommendation Ferrite Core: ZCAT3035-1330 (TDK Co.)

(3) AC/DC Power Supply
The following AC/DC power supply must be used.
Model of Power Supply: PBA-150F-24 (Cosel Co., Ltd.)

Note The FG terminal of the power supply must be grounded.

(4) EMC Filter
The following EMC filter must be attached to DC power line.
Model of EMC Filter: RSMN-2006 (TDK-Lambda Co.)

Note The FG terminal on the EMC filter must be grounded.

(5) Surge Absorber
The following surge absorber must be attached to the output terminal of the EMC Filter.
Model of Surge Absorber: V14E275P (Littelfuse Inc.)

(6) Aluminum Electrolytic Capacitor
An aluminum electrolytic capacitor with a rating of 35 V/1000 μF must be attached to the output terminal of the EMC Filter.

OMRON Corporation
Industrial Automation Company
Control Devices Division H.Q.
PLC Division
Shiokoji Horikawa, Shimogyo-ku,
Kyoto, 600-8530 Japan
Tel: (81) 75-344-7084/Fax: (81) 75-344-7149

Regional Headquarters
OMRON EUROPE B.V.
Wegalaan 67-69-2132 JD Hoofddorp
The Netherlands
Tel: (31)2356-81-300/Fax: (31)2356-81-388

OMRON ELECTRONICS LLC
One Commerce Drive Schaumburg,
IL 60173-5302 U.S.A.
Tel: (1) 847-843-7900/Fax: (1) 847-843-7787

OMRON ASIA PACIFIC PTE. LTD.
No. 438A Alexandra Road # 05-05/08 (Lobby 2),
Alexandra Technopark, Singapore 119967
Tel: (65) 6835-3011/Fax: (65) 6835-2711

OMRON (CHINA) CO., LTD.
Room 2211, Bank of China Tower,
200 Yin Cheng Zhong Road,
PuDong New Area, Shanghai, 200120, China
Tel: (86) 21-5037-2222/Fax: (86) 21-5037-2200

OMRON Industrial Automation Global: **www.ia.omron.com**

Authorized Distributor:

Printed in Japan
Cat. No. V235-E1-04 1208